THERMO KING

Installation Manual

Precedent™ Multi-Temperature Installation Manual A

Multi-Temperature Systems

Installation Manual (A)
C-600M, S-610M and S-610DE Host Unit Installation

Revision K

December 2024

TK 55745-2-IM-EN

TRANE TECHNOLOGIES

THERMO KING

Introduction

This manual was written to assist with the installation of the Thermo King Precedent Multi-Temperature host refrigeration systems onto trailers specifically designed and built for refrigerated applications. Installation Manual (B) TK 55774 covers the installation of the remote evaporators along with the necessary procedures required to complete the multi-temperature installation.

Due to its complexity, you should not attempt this installation unless you:

- Are an experienced mechanic
- Can safely lift 34 kilos (75 lbs.)
- Are certified or trained in the repair and maintenance of diesel powered refrigeration systems
- Have a basic understanding of electricity and electrical wiring
- Have the necessary tools and equipment to complete the installation

OPTIONS: Installation instructions for Thermo King optional equipment are available on line @thermoking.com or iService.

This manual is published for informational purposes only. Thermo King makes no representations warranties express or implied, with respect to the information recommendations and descriptions contained herein. Information provided should not be regarded as all-inclusive or covering all contingencies. If further information is required, Thermo King Corporation Service Department should be consulted.

Thermo King's warranty shall not apply to any equipment which has been "so installed, maintained, repaired or altered as, in the manufacturer's judgment, to affect its integrity."

Manufacturer shall have no liability to any person or entity for any personal injury, property damage or any other direct, indirect, special, or consequential damages whatsoever, arising out of the use of this manual or any information, recommendations or descriptions contained herein. The procedures described herein should only be undertaken by suitably qualified personnel. Failure to implement these procedures correctly may cause damage to the Thermo King unit or other property or personal injury.

Revision History

Revision A	(09/15) Released new manual format.
Revision B	(09/15) Corrected text error.
Revision C	(11/15) Added S-600DE.
Revision D	(08/16) Added S-610M, S-610DE and options information to introduction.
Revision E	(07/18) General update to manual including new door latches and factory installed fuel pump and harness.
Revision F	(08/20) Added information regarding wiring SmartPower units with the remote power receptacle option.
Revision G	(05/21) Added information regarding new fuel system installed on S-610M and S-610DE units only.
Revision H	(01/22) Corrected text error.
Revision I	(02/23) Corrected battery P/N.
Revision J	(07/23) Added new fuel filter system for C-Series units.
Revision K	(12/2024) Updated UFLS Information and Other General Updates.

©2015 Trane Technologies

THERMO KING

Table of Contents

Safety Precautions **5**
- Danger, Warning, Caution, and Notice 5
- General Practices 5
- Battery Installation and Cable Routing 7
- Refrigerant Hazards 7
- Refrigerant Oil Hazards 8
- First Aid 9

Trailer Requirements **10**
- Swing Radius and King Pin Requirements 10
- Evaporator Opening Requirements 11
- Mounting Hardware Requirements 12
  - Unit Mounting Bolts 12
  - Mounting Bolt Specifications 13

Unit Dimensions **15**
- Evaporator Blower Outlet Housing Updated in 2023 19

Unit Weight **20**

Fuel Tank Mounting **21**

Battery Selection Guide **22**

Lifting Bar Dimensions **23**

Required Tools for Installation **25**

Installation Components – Trailer Applications **26**

Unpacking Unit **27**

Installing the Heat Shield **28**

Installing the Unit **29**
- Unit Installation 29
- Access to Mounting Bolts 29

Installing Drain Hoses and Coolant Overflow Hose – Trailer Applications **31**

Installing Fuel Lines **32**
- C-Series Units Only 32
  - Without Optional Fuel Heater 32
- S-Series Units Only 34
  - Without Optional Fuel Heater 34
  - With Optional Fuel Heater 36

Installing UFLS Harness – Trailer Applications **38**

Units Built Before December 16, 2024 38
Units Built After December 16, 2024 40
Installing SmartPower Receptacle — Trailer Applications 42
Installing LED Clearance Lighting (Option) – Trailer Applications 43
Installing Battery 44
Installing Top Covers and Bottom Pan – Trailer Applications 46
Important Information – Completing The Installation 48
C-600M , S-610M and S-610DE (3 Zone) Units 48
S-610DE (2 Zone) Units 48

THERMO KING

Safety Precautions

Danger, Warning, Caution, and Notice

Thermo King recommends that all service be performed by a Thermo King dealer and to be aware of several general safety practices.

Safety advisories appear throughout this manual as required. Your personal safety and the proper installation of this unit depend upon the strict observance of these precautions.

⚠ DANGER	Indicates an imminently hazardous situation which, if not avoided, will result in death or serious injury.
⚠ WARNING	Indicates a potentially hazardous situation which, if not avoided, could result in death or serious injury.
⚠ CAUTION	Indicates a potentially hazardous situation which, if not avoided, could result in minor or moderate injury and unsafe practices.
NOTICE	Indicates a situation that could result in equipment or property-damage only accidents.

General Practices

⚠ Danger

Hazardous Voltage!

Dangerous three phase AC electric power is present whenever the unit is operating in either Diesel Mode or Electric Mode and whenever the unit is connected to a source of external standby power. Voltages of this magnitude can be lethal. Exercise extreme caution when working on the unit. If there is a risk of energized electrical contact, arc, or flash, technicians MUST put on all PPE in accordance with OSHA, NFPA 70E, or other local, state, or country-specific requirements for arc flash protection PRIOR to servicing the unit. NEVER PERFORM ANY SWITCHING, DISCONNECTING, OR VOLTAGE TESTING WITHOUT PROPER ELECTRICAL PPE AND ARC FLASHING CLOTHING. ELECTRICAL METERS AND EQUIPMENT MUST BE PROPERLY RATED FOR INTENDED VOLTAGE.

⚠ Danger

Hazard of Explosion!

Never apply heat to a sealed refrigeration system or container. Heat increases internal pressure, which might cause an explosion resulting in death or serious injury.

⚠ Danger

Hazardous Gases - Personal Protective Equipment (PPE) Required!

Refrigerant in the presence of an open flame, spark, or electrical short produces toxic gases that are severe respiratory irritants which can cause serious injury or possible death. When working with or around hazardous chemicals, ALWAYS refer to the applicable Material Data Safety Sheets (MSDS) and OSHA/GHS (Global Harmonized System of Classification and Labelling of Chemicals) guidelines for information on allowable personal exposure levels, proper respiratory protection, and handling instructions.

⚠ Danger

Refrigerant Vapor Hazard!

Do not inhale refrigerant. Use caution when working with refrigerant or a refrigeration system in any confined area with a limited air supply. Refrigerant displaces air and can cause oxygen depletion, resulting in suffocation and possible death. When working with or around hazardous chemicals, ALWAYS refer to the applicable Material Data Safety Sheets (MSDS) and OSHA/GHS (Global Harmonized System of Classification and Labelling of Chemicals) guidelines for information on allowable personal exposure levels, proper respiratory protection, and handling instructions.

⚠ Danger

Risk of Injury!

Keep your hands, clothing, and tools clear of fans and/or belts when working on a unit that is running or when opening or closing compressor service valves. Loose clothing might entangle moving pulleys or belts, causing serious injury or possible death.

⚠ Warning

Hazard of Explosion!

Never close the compressor discharge service valve when the unit is operating. Never operate the unit with the discharge valve closed (front seated). This condition increases internal pressure, which can cause an explosion.

⚠ Warning

Personal Protective Equipment (PPE) Required!

Always wear goggles or safety glasses and proper PPE when working on a unit. Refrigerant liquid, oil, and battery acid can permanently damage your eyes. When working with or around hazardous chemicals, ALWAYS refer to the applicable Material Data Safety Sheets (MSDS) and OSHA/GHS (Global Harmonized System of Classification and Labelling of Chemicals) guidelines for information on allowable personal exposure levels, proper respiratory protection, and handling instructions.

⚠ Warning

Equipment Damage and Risk of Injury!

Never drill holes into the unit unless instructed by Thermo King. Holes drilled into high voltage cables could cause an electrical fire, severe personal injury, or even death.

⚠ Warning

Risk of Injury!

When using ladders to install or service refrigeration systems, always observe the ladder manufacturer's safety labels and warnings. A work platform or scaffolding is the recommended method for installations and servicing.

Notice

Equipment Damage!

All unit mounting bolts must be installed, be the correct length for their application, and torqued to specifications. Missing bolts, incorrect bolt lengths and improper torque specifications can damage equipment and void the warranty.

Battery Installation and Cable Routing

⚠ Warning

Hazard of Explosion!

An improperly installed battery could result in a fire, explosion, or injury. A Thermo King approved battery must be installed and properly secured to the battery tray.

⚠ Warning

Hazard of Explosion!

Improperly installed battery cables could result in a fire, explosion, or injury. Battery cables must be installed, routed, and secured properly to prevent them from rubbing, chaffing, or making contact with hot, sharp, or rotating components.

⚠ Warning

Fire Hazard!

Do not attach fuel lines to battery cables or electrical harnesses. This has the potential to cause a fire and could cause serious injury or death.

⚠ Warning

Hazard of Explosion!

Always cover battery terminals to prevent them from making contact with metal components during battery installation. Battery terminals grounding against metal could cause the battery to explode.

⚠ Caution

Hazardous Service Procedures!

Set all unit electrical controls to the OFF position before connecting battery cables to the battery to prevent the unit from starting unexpectedly and causing personal injury.

Notice

Equipment Damage!

Do not connect other manufacturers' equipment or accessories to the unit or to the Thermo King batteries unless approved by Thermo King. Failure to do so can result in severe damage to equipment and void the warranty.

Refrigerant Hazards

⚠ Warning

Personal Protective Equipment (PPE) Required!

Refrigerant in a liquid state evaporates rapidly when exposed to the atmosphere, freezing anything it contacts. Wear butyl lined gloves and other clothing and eye wear when handling refrigerant to help prevent frostbite. When working with or around hazardous chemicals, ALWAYS refer to the applicable Material Data Safety Sheets (MSDS) and OSHA/GHS (Global Harmonized System of Classification and Labelling of Chemicals) guidelines for information on allowable personal exposure levels, proper respiratory protection, and handling instructions.

Refrigerant Oil Hazards

⚠ Warning

Personal Protective Equipment (PPE) Required!

Protect your eyes from contact with refrigerant oil. The oil can cause serious eye injuries. Protect skin and clothing from prolonged or repeated contact with refrigerant oil. To prevent irritation, wash your hands and clothing thoroughly after handling the oil. Rubber gloves are recommended. When working with or around hazardous chemicals, ALWAYS refer to the applicable Material Data Safety Sheets (MSDS) and OSHA/GHS (Global Harmonized System of Classification and Labelling of Chemicals) guidelines for information on allowable personal exposure levels, proper respiratory protection, and handling instructions.

First Aid

REFRIGERANT

- **Eyes:** For contact with liquid, immediately flush eyes with large amounts of water and get prompt medical attention.
- **Skin:** Flush area with large amounts of warm water. Do not apply heat. Remove contaminated clothing and shoes. Wrap burns with dry, sterile, bulky dressing to protect from infection. Get prompt medical attention. Wash contaminated clothing before reuse.
- **Inhalation:** Move victim to fresh air and use CPR (cardio pulmonary resuscitation) or mouth-to-mouth resuscitation to restore breathing, if necessary. Stay with victim until emergency personnel arrive.
- **Frost Bite:** In the event of frost bite , the objectives of First Aid are to protect the frozen area from further injury, warm the affected area rapidly, and to maintain respiration.

REFRIGERANT OIL

- **Eyes:** Immediately flush with large amounts of water for at least 15 minutes. Get prompt medical attention.
- **Skin:** Remove contaminated clothing. Wash thoroughly with soap and water. Get medical attention if irritation persists.
- **Inhalation:** Move victim to fresh air and use CPR (cardio pulmonary resuscitation) or mouth-to-mouth resuscitation to restore breathing, if necessary. Stay with victim until emergency personnel arrive.
- **Ingestion:** Do not induce vomiting. Immediately contact local poison control center or physician.

ENGINE COOLANT

- **Eyes:** Immediately flush with large amounts of water for at least 15 minutes. Get prompt medical attention.
- **Skin:** Remove contaminated clothing. Wash thoroughly with soap and water. Get medical attention if irritation persists.
- **Ingestion:** Do not induce vomiting. Immediately contact local poison control center or physician.

ELECTRICAL SHOCK

Take IMMEDIATE action after a person has received an electrical shock. Get quick medical assistance, if possible.

The source of the shock must be quickly stopped, by either shutting off the power or removing the victim. If the power cannot be shut off, the wire should be cut with an non-conductive tool, such as a wood-handle axe or thickly insulated cable cutters. Rescuers should wear insulated gloves and safety glasses, and avoid looking at wires being cut. The ensuing flash can cause burns and blindness.

If the victim must be removed from a live circuit, pull the victim away with a non-conductive material. Use wood, rope, a belt or coat to pull or push the victim away from the current. DO NOT TOUCH the victim. You will receive a shock from current flowing through the victim's body. After separating the victim from power source, immediately check for signs of a pulse and respiration. If no pulse is present, start CPR (cardio pulmonary resuscitation). If a pulse is present, respiration might be restored by using mouth-to-mouth resuscitation. Call for emergency medical assistance.

Trailer Requirements

Swing Radius and King Pin Requirements

Important: VERIFY SWING RADIUS AND KING PIN DIMENSIONS BEFORE INSTALLING THE UNIT.

Notice

Equipment Damage!

The minimum clearance required for the swing radius must be 1306.3 mm (51.43 in.) or severe damage to the equipment will result. VERIFY THIS DIMENSION BEFORE INSTALLING UNIT!

Notice

Equipment Damage!

The minimum distance from the king pin to the front of the trailer must be at least 609.6 mm (24.00 in.) or severe damage to the equipment will result. VERIFY THIS DIMENSION BEFORE INSTALLING UNIT! See "Swing Radius and King Pin Requirements".

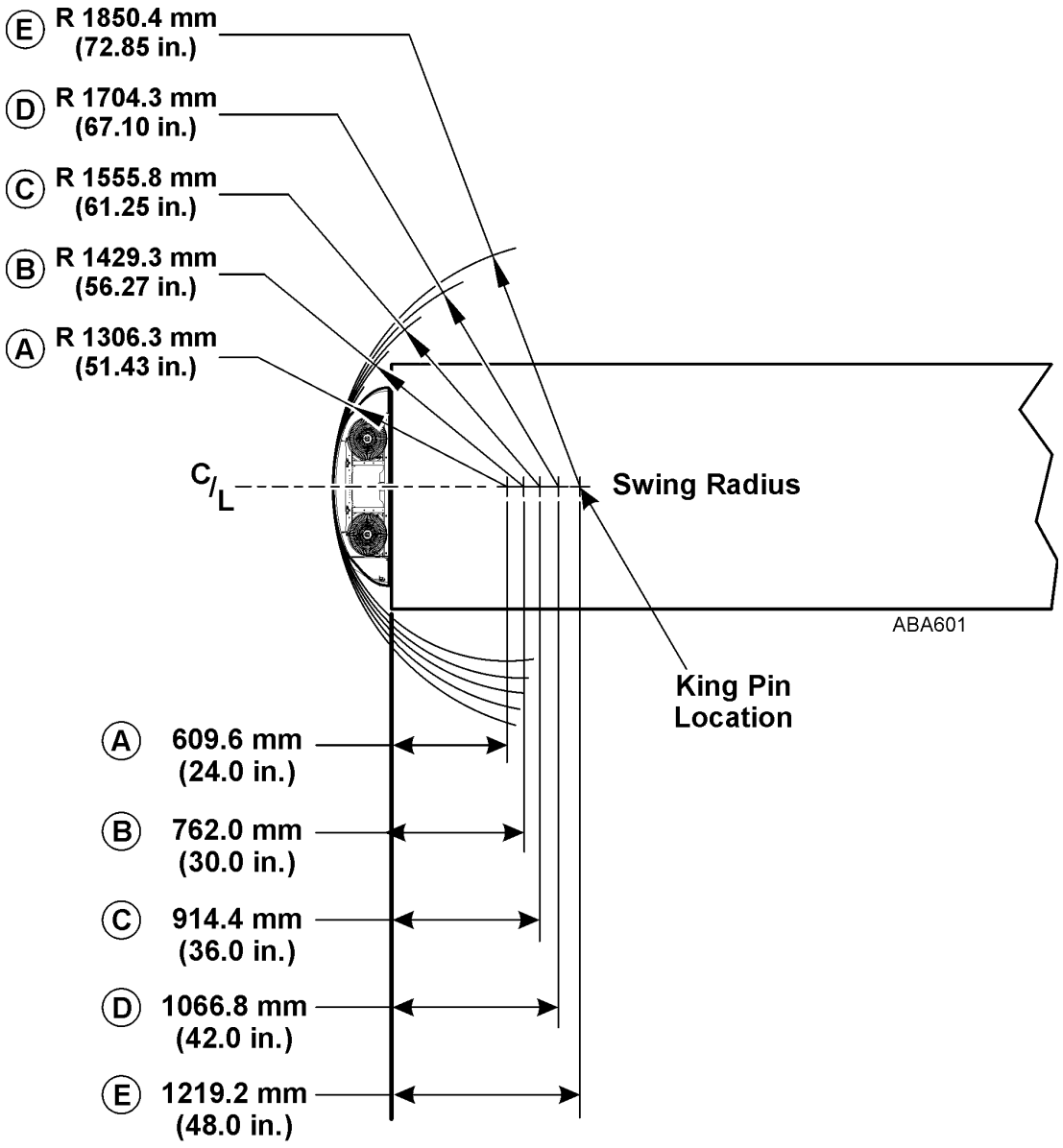

Evaporator Opening Requirements

⚠ Danger

Risk of Injury!

The front wall of the trailer must be structurally strong enough to support the weight of the refrigeration unit.

Important: *Location of unit mounting bolts and evaporator opening in front wall is critical. VERIFY ALL DIMENSIONS BEFORE INSTALLING UNIT. Refer to the illustration provided.*

Note: *It may be necessary to relocate the trailer's front corner clearance lights to the corner radius of the trailer to prevent damage.*

Note: *Verify adequate clearance is available for trailer fresh air exchange doors, if applicable.*

EVAPORATOR OPENING REQUIREMENTS
FRONT VIEW

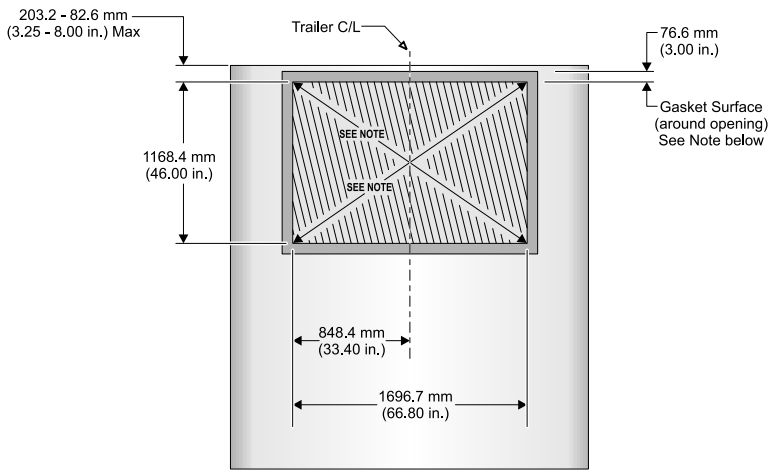

NOTE: Corners of Evaporator opening MUST be Square. The diagonal measurement must be within 3.2 mm (0.12 in.).

NOTE: Gasket Surface **must** be free of rivets, seams, & bolt heads

UNIT MOUNTING BOLT LOCATIONS
FRONT VIEW

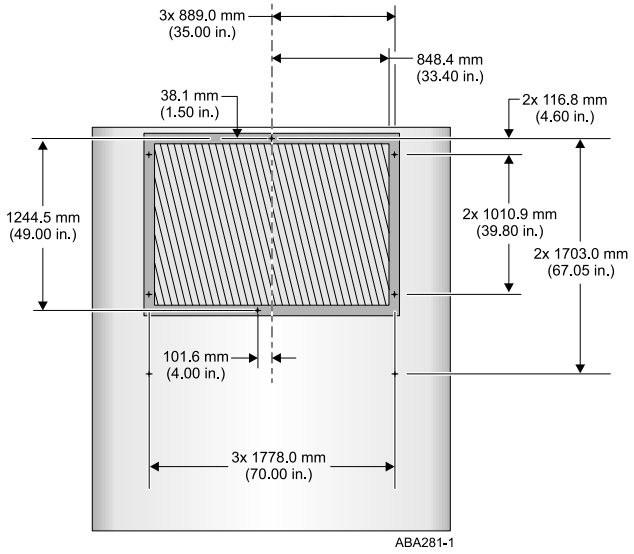

Mounting Hardware Requirements

Unit Mounting Bolts

⚠ Danger

Risk of Injury!

Eight mounting bolts must be installed to properly secure the unit to the trailer front wall. Failure to do so could result in severe damage to equipment, void the warranty, or cause personal injury or death.

Important: *The location of the unit mounting bolts in the front wall of the trailer is critical for proper unit installation. Refer to the illustration provided.*

The following mounting bolt requirements must be adhered to:

- All eight mounting bolts must be installed to secure unit to trailer.
- Surface of all mounting bolts are to be flat within 2.50 mm (0.10 in.).
- All mounting bolts must be square with the front wall and securely fastened to the trailer wall in such a manner to allow the mounting nuts be torqued to 82 N•m (60 ft. lbs.) from outside the trailer.
- **Six** unit mounting bolts must extend a **minimum** 57.20 mm (2.25 in.) and a **maximum** of 69.85 mm (2.75 in.) beyond the surface of the front wall.
- **One** unit mounting bolt must extend a **minimum** 44.45 mm (1.75 in.) and a **maximum** of 63.5 mm (2.50 in.) beyond the surface of the front wall.
- **One** unit mounting bolt must extend a **minimum** 57.20 mm (2.25 in.) and a **maximum** of 63.5 mm (2.50 in.) beyond the surface of the front wall.

  Note: *Refer to the illustration on the following page for mounting bolt locations and lengths.*

Mounting Bolt Specifications

⚠ Danger

Equipment Damage and Risk of Injury!!

The use of mounting bolts other than those specified could result in severe damage to equipment, void the warranty, or cause personal injury or death.

Use 1/2 in.-13 UNC - 28 Rolled thread grade 5, medium carbon steel bolts and locking nuts. All hardware must be zinc plated with dichromate finish.

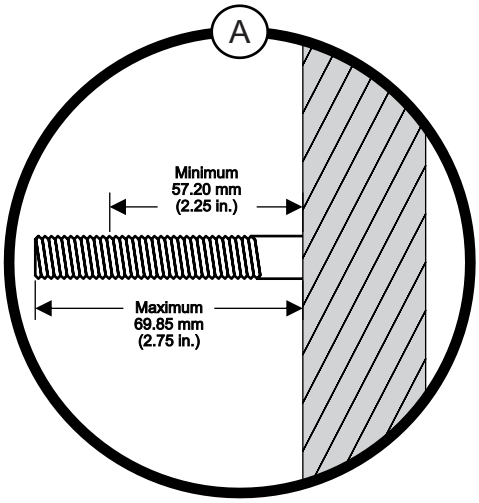
A
Minimum
57.20 mm
(2.25 in.)
Maximum
69.85 mm
(2.75 in.)

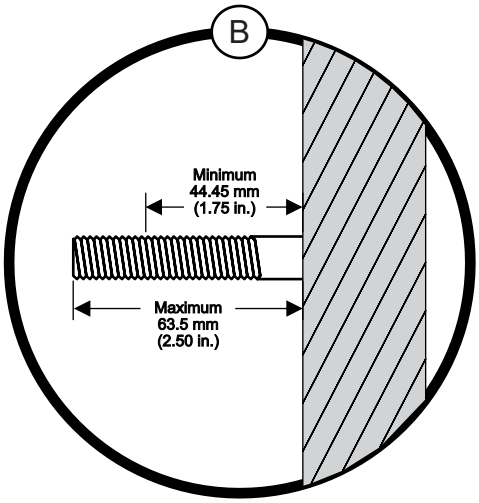
B
Minimum
44.45 mm
(1.75 in.)
Maximum
63.5 mm
(2.50 in.)

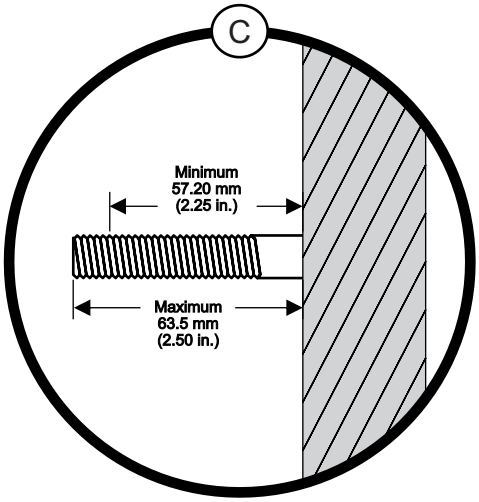
C
Minimum
57.20 mm
(2.25 in.)
Maximum
63.5 mm
(2.50 in.)

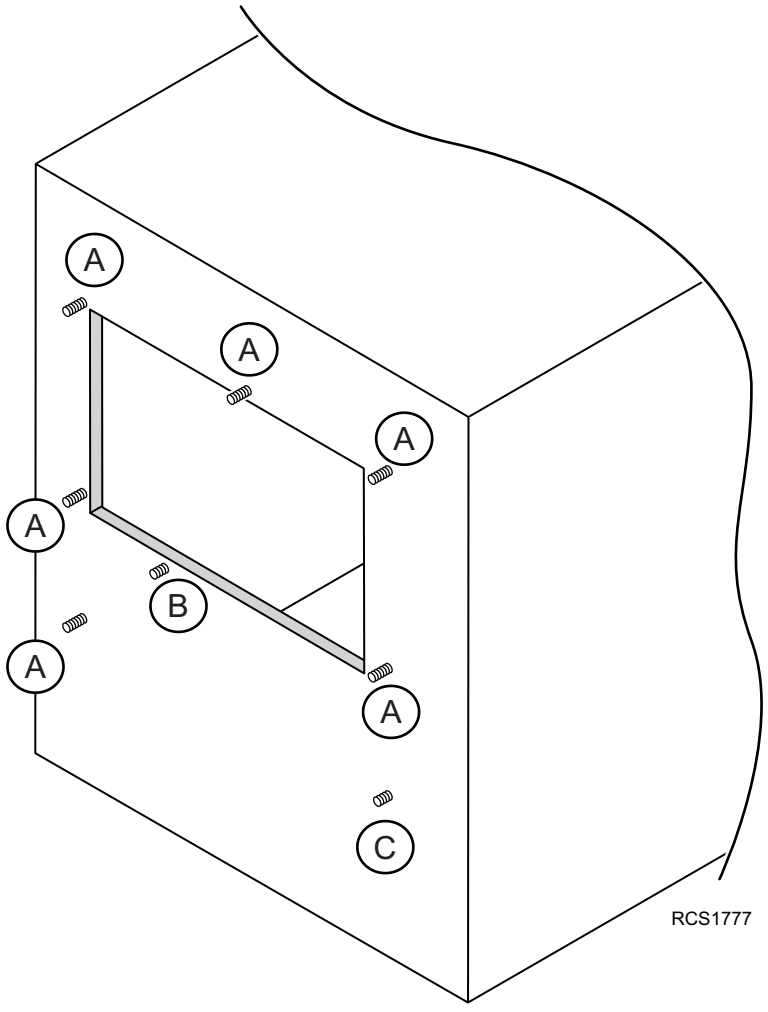
A
A
A
A
B
A
A
C
RCS1777

Unit Dimensions

Important: *Adequate clearance must be provided to allow for routine service and maintenance of the Thermo King unit. Refer to the illustrations provided.*

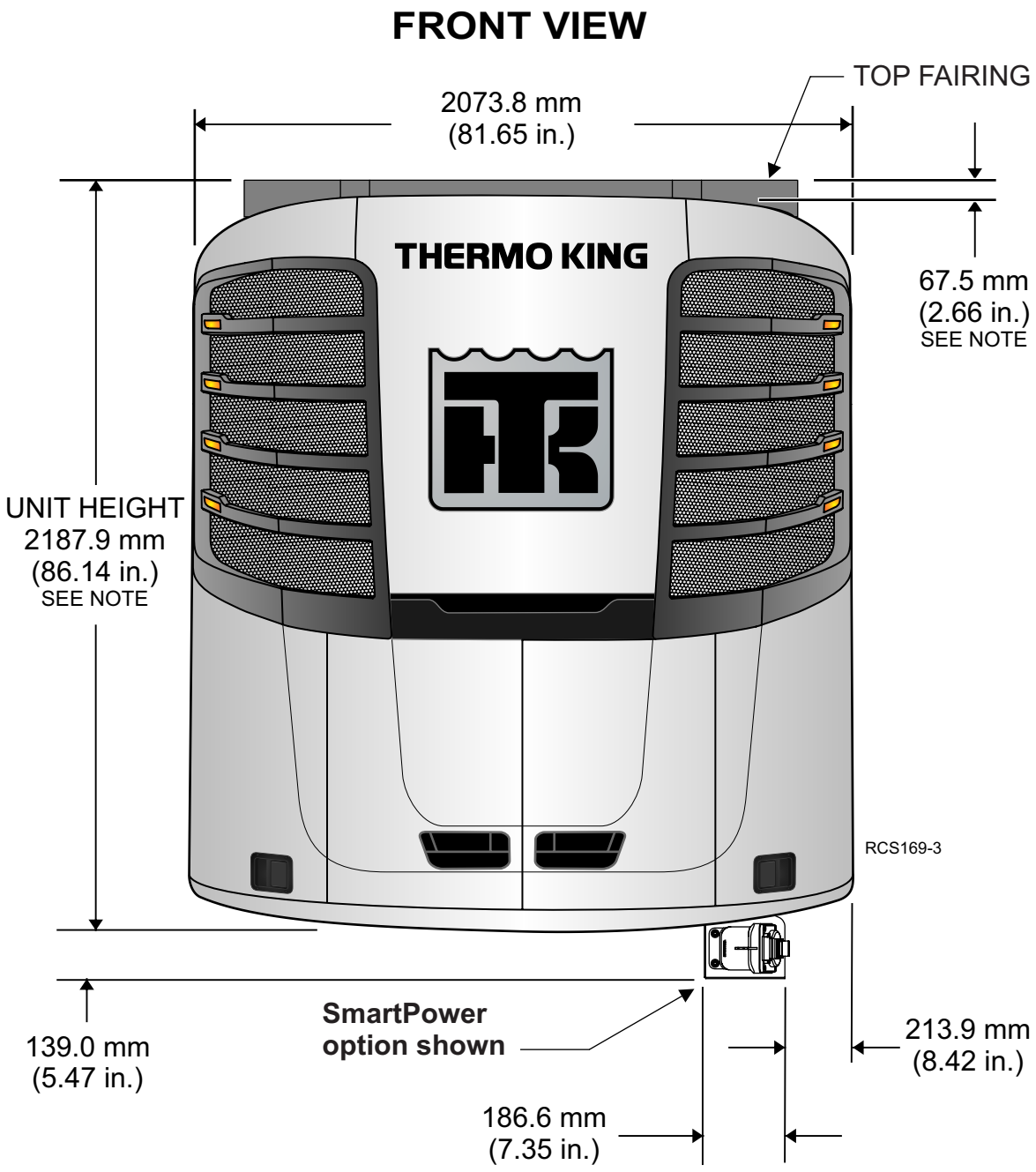

NOTE: The unit height shown includes the top fairing. Some applications such as Domestic Refrigerated Containers (DRC) and Trailer On Flat Car (TOFC) with an intermodal guard will not have a top fairing. The unit height for these applications would be 67.5 mm (2.66 in) less.

REAR VIEW

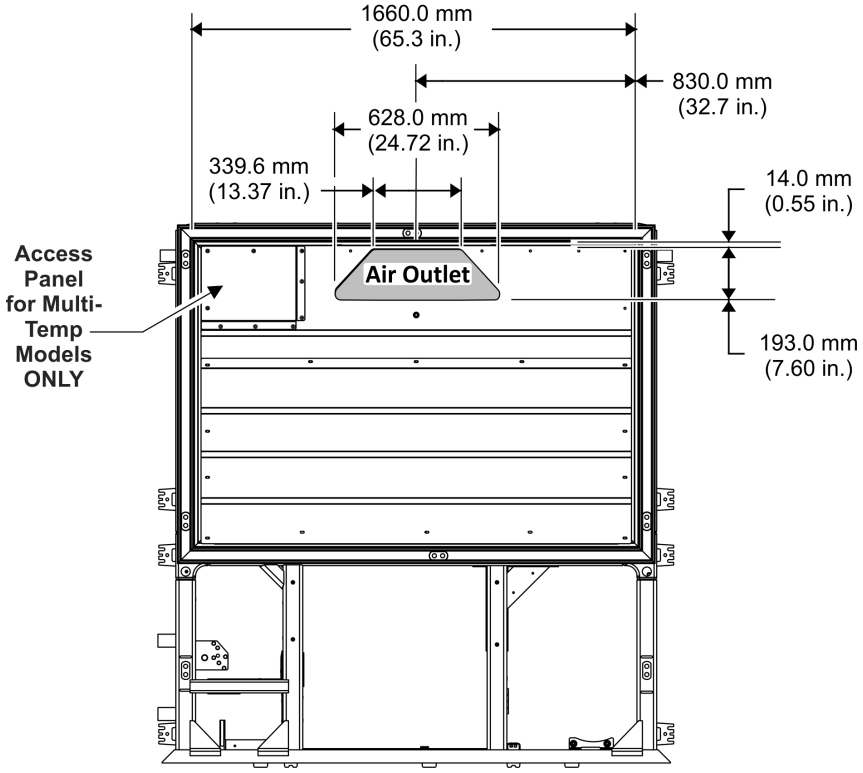

REAR VIEW DE

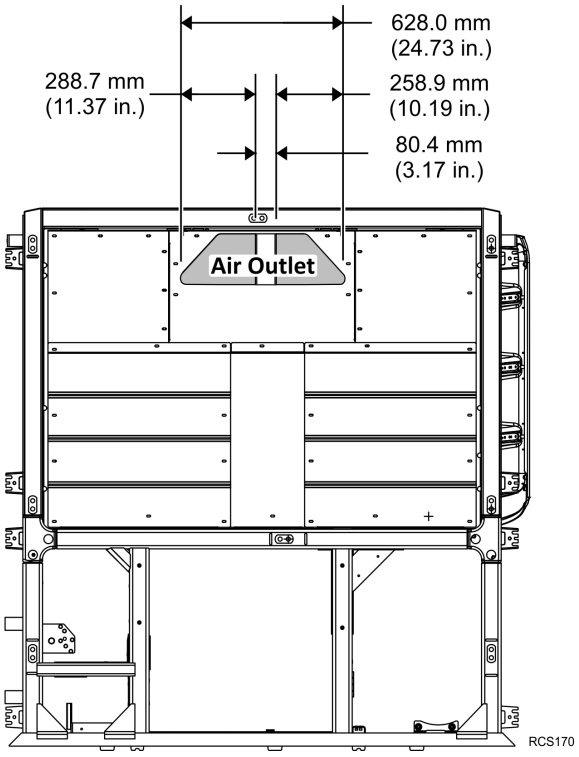

Top View
Upper Grille Radii

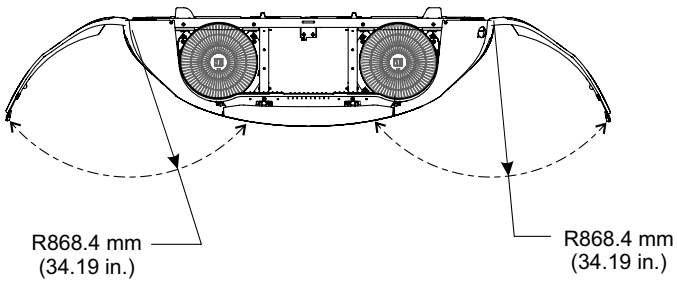

Top View
Lower Door & Panel Radii

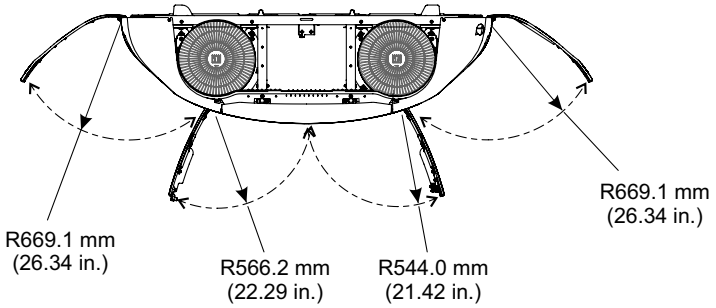

Side View
Top Door Radius

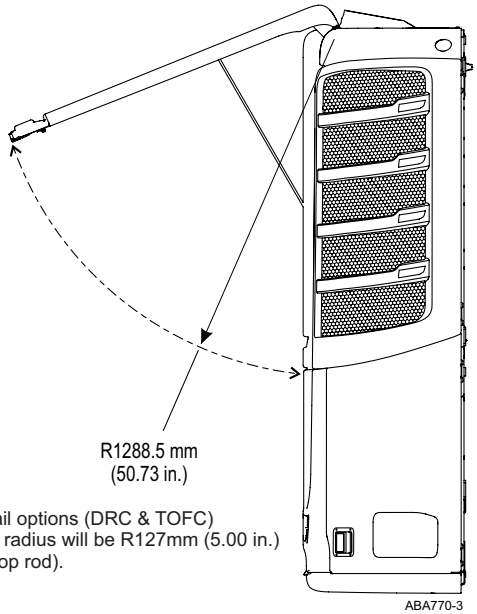

NOTE: For rail options (DRC & TOFC) door opening radius will be R127mm (5.00 in.) (with short prop rod).

SIDE VIEW

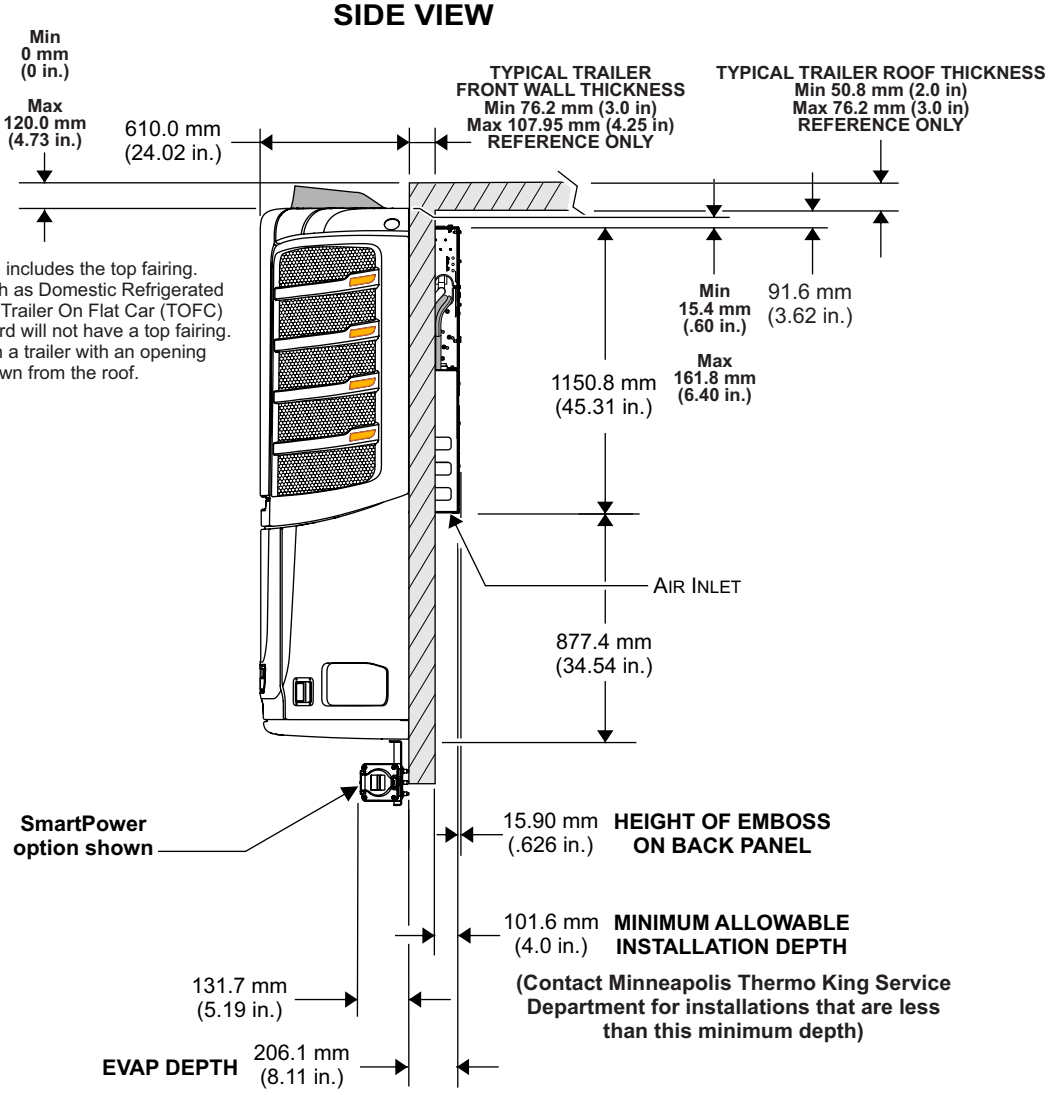

NOTE: The unit shown includes the top fairing. Some applications such as Domestic Refrigerated Containers (DRC) and Trailer On Flat Car (TOFC) with an intermodal guard will not have a top fairing. Unit shown installed on a trailer with an opening 203.2 mm (8.00 in.) down from the roof.

ABA635-2

Evaporator Blower Outlet Housing Updated in 2023

See Service Bulletin SB956 Precedent® New Style Evaporator Blower Outlet Housing

A new style evaporator blower outlet housing has been released for all Precedent units beginning in 2023.

The new evaporator blower housing has a vertical support molded into the center of the discharge outlet to prevent warpage during manufacturing and shipping. The vertical support does not significantly affect discharge air flow and is designed to be left in the unit after unit install. During installation of the unit, if the support is found broken or otherwise damaged, it must be removed completely. If removal is necessary, a cutting tool to cleanly separate the center support from the blower housing outlet is required. Do not attempt to bend and snap off the support; damage to the evaporator outlet may occur.



Unit Weight

Approximate Weight — Precedent Multi-Temperature Units:	
C-600M	864 kg (1905 lbs.)
with SmartPower™ 12 HP/230V	968 kg (2133 lbs.)
with SmartPower™ 12 HP/460V	982 kg (2166 lbs.)
with SmartPower™ 19 HP/460V	982 kg (2166 lbs.)
S-610M	881 kg (1942 lbs.)
with SmartPower™ 12 HP/230V	983 kg (2167 lbs.)
with SmartPower™ 12 HP/460V	998 kg (2200 lbs.)
with SmartPower™ 15 or 16 HP/460V	998 kg (2200 lbs.)
with SmartPower™ 19 HP/460V	998 kg (2200 lbs.)
S-610DE 2 Zone*	889 kg (1959 lbs.)
with SmartPower™ 12 HP/230V	988 kg (2178 lbs.)
with SmartPower™ 12 HP/460V	1003 kg (2211 lbs.)
with SmartPower™ 15 or 16 HP/460V	1003 kg (2211 lbs.)
with SmartPower™ 19 HP/460V	1003 kg (2211 lbs.)
**** 3 Zone units add 4.5 kg (10 lbs.) to all weights.***	

Fuel Tank Mounting

⚠ Danger

Risk of Injury!

An improperly installed fuel tank could lead to serious injury or death. Consult your trailer manufacturer for specific details on proper fuel tank installation and recommendations.

⚠ Warning

Equipment Damage!

NEVER remove or install any other component in place of the fuel tank air vent. The factory installed fuel tank air vent must be in place and functional for the Thermo King unit's fuel system to operate correctly and for the fuel tank to remain in compliance with Federal Motor Carrier Safety Administration specifications (title 49, paragraph 393.67). A plugged or restricted fuel tank air vent can result in premature damage to the fuel pump and could also cause severe damage to the fuel tank.

Battery Selection Guide

Notice

Equipment Damage!

Do not connect other manufacturers' equipment or accessories to the unit or to the Thermo King batteries unless approved by Thermo King. Failure to do so can result in severe damage to equipment and void the warranty.

Important: *The specified battery, electrical wiring and electronic controls were designed to operate and maintain only the Thermo King refrigeration system and factory authorized Thermo King options.*

Trailer units are designed for one, Group C31,12 volt battery supplied by the installer.

The battery must be suitable for deep cycling, heavy duty and rated with a minimum of 95 amp/hr.

Note: *See the following table for Thermo King approved batteries.*

BATTERY APPLICATION TABLE	
925 CCA Wet Cell Thermo King ReliaMax 925N P/N 2030733 Threaded Stud P/N 2030732 SAE Post	1150 CCA Dry Cell (AGM) Thermo King EON P/N 2030550 Threaded Stud P/N 2030551 SAE Post
• Wet Cell Technology • Recommended for both warm and cold climates • High cranking power at low ambient temperatures • 18-24 month expected life *see note below	• Dry Cell (AGM) Technology • Recommended for extreme climates and for Rail Ready (RR), Domestic Refrigerated Container (DRC), and Trailer on Flat Car (TOFC) applications. • High cranking power at lower ambient temperatures • Suited for extreme temperatures • Best for high cycling applications (Cycle-Sentry use) • 5-7 year expected life
* NOTE: Wet cell battery life and maintenance requirements are determined by the operating environment and the charge/discharge rate (cycles) while the battery is in service. Higher ambient temperatures and frequent discharges will shorten a wet cell battery's overall life expectancy and increase maintenance requirement. If the unit is not going to be used for an extended period of time, turn the Microprocessor On/Off Power Switch to the OFF position to maximize battery life.	

Lifting Bar Dimensions

⚠ Warning

Risk of Injury!

Thermo King requires a 2 point lifting bar to safely lift and install units. A lifting bar can be made from the drawings provided using ASTM A514 Grade B Steel Plate (UNS K11630).

⚠ Warning

Risk of Injury!

The lifting bar and lifting device combined must be able to support minimum weight of 1360.8 kilos (1 1/2 tons).

Important: *Use forged clevis and pins, forged chain links and forged eyebolts with strength equal to total lift capacity of hoist mechanism and that meet all safety standards.*

Note: *Refer to the illustrations provided.*

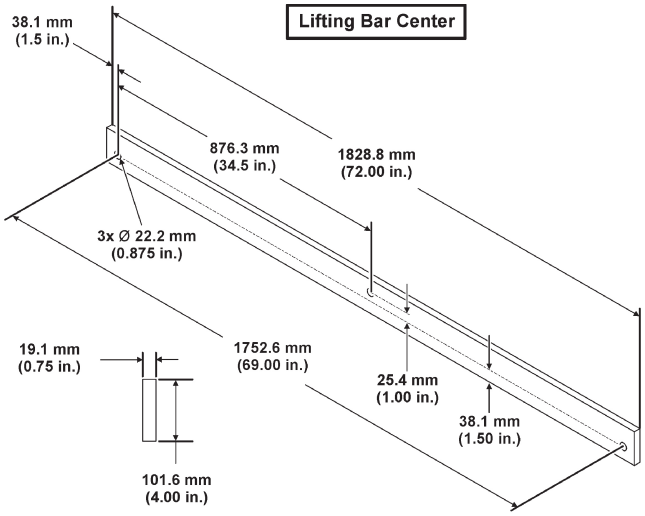

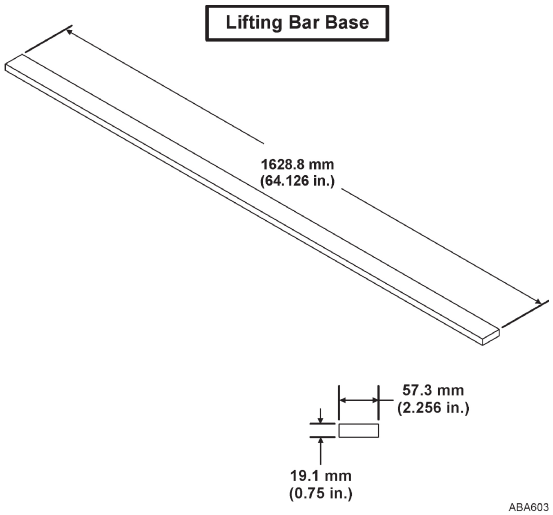

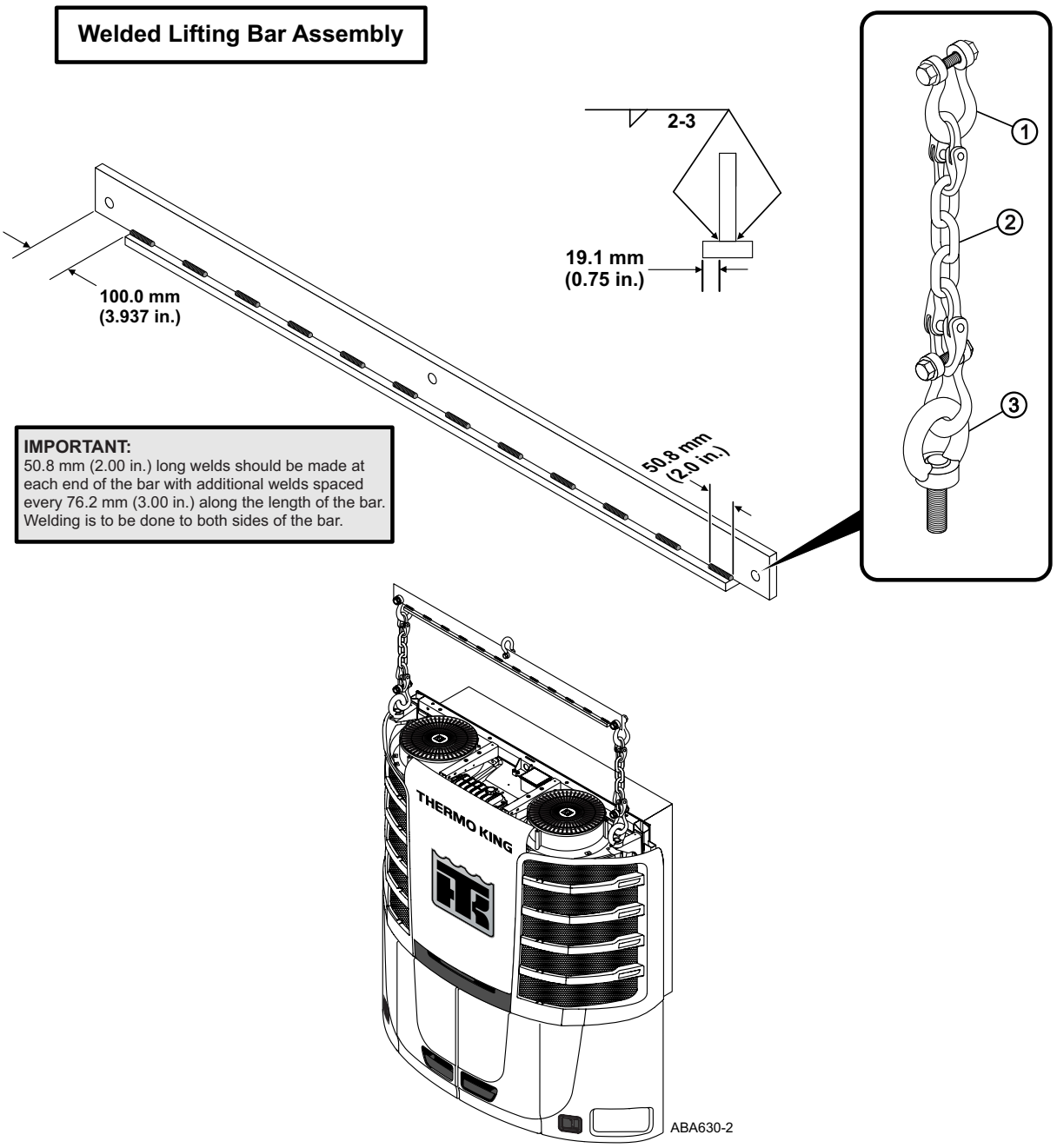

1.	Forged Clevis Pins
2.	Forged Chain Links
3.	Forged Eyebolts

Note: *These instructions are provided for fabricating the lifting bar used to install Precedent units. Thermo King is not the manufacturer of the lifting bar and is not responsible for material used or failure of this lifting device.*

Required Tools for Installation

1. Safety Glasses
2. Drill
3. Drill Bits
4. Tape Measure
5. Mechanics Tools
6. Lifting Bar
7. Work Platform (Recommended)
8. Torque Wrench
9. Forged Eyebolts (5/8–11)

Note: *Equipment such as scales, gauges, refrigerant leak detectors, and torque wrenches should be in good working condition and routinely calibrated to assure accurate readings.*

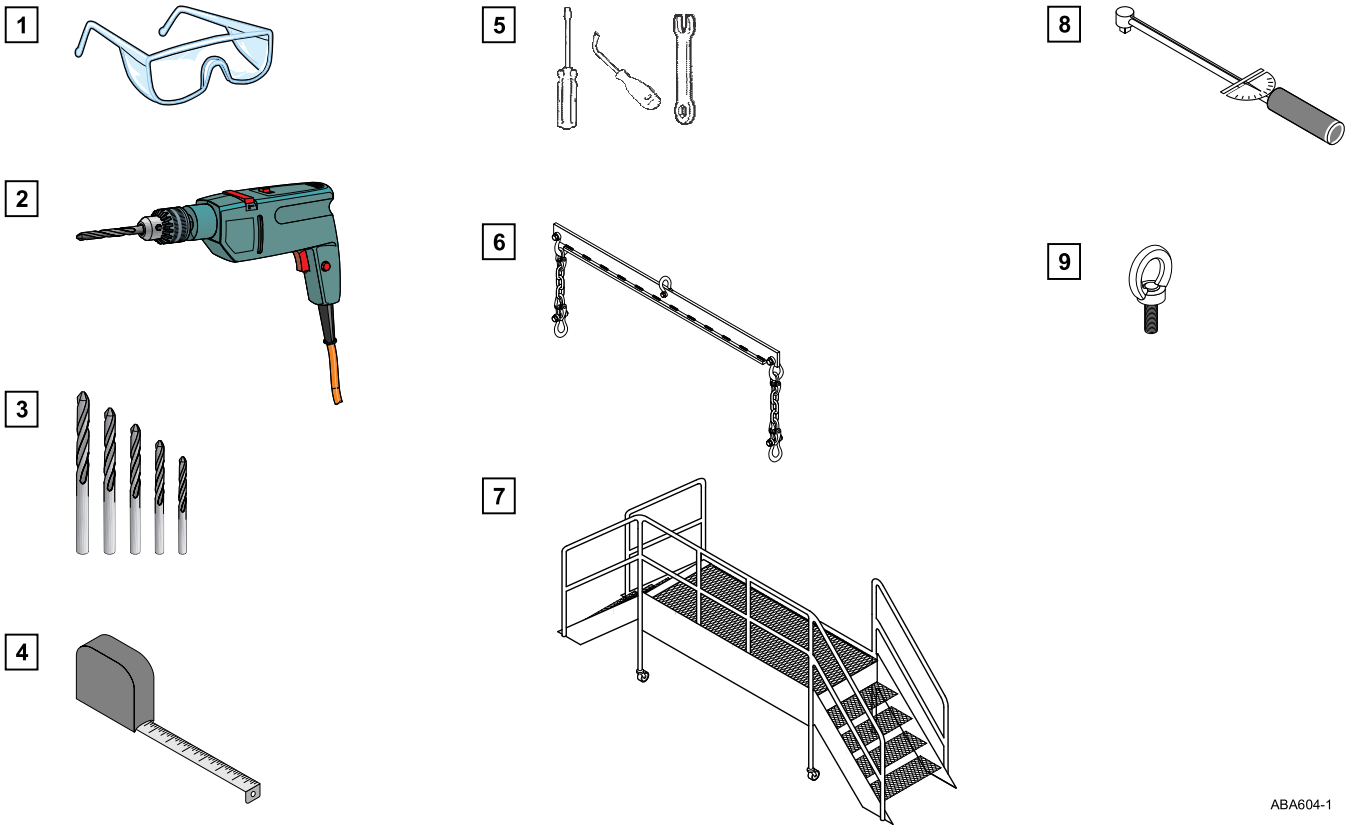

Installation Components – Trailer Applications

1 **Unit Mounting Kit**

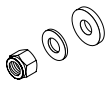

2 **Drain Tube Kit**

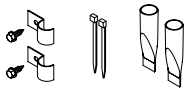

3 **Fuel Pump Kit**

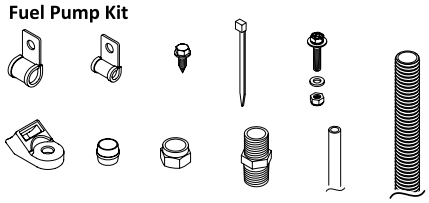

4 **Skin Mounting Kit**

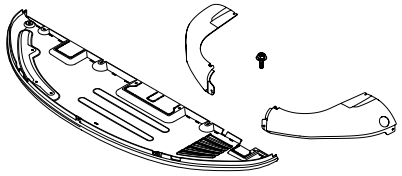

5 **Battery Mounting Kit**

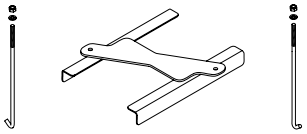

6 **UFLS Harness Kit**

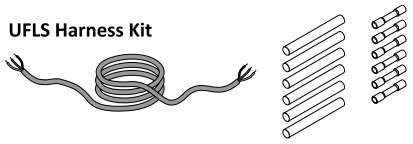

7 **Top Fairing Kit**

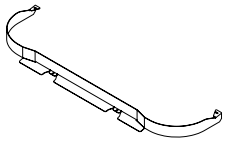

8 **(OPTION) SmartPower Kit**

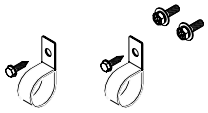

9 **Heat Shield & Mounting Screws**

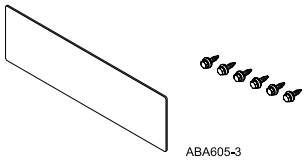

Unpacking Unit

⚠ Warning

Risk of Injury!

Thermo King requires a 2 point lifting bar to safely lift and install units. A lifting bar can be made from the drawings provided using ASTM A514 Grade B Steel Plate (UNS K11630).

⚠ Warning

Risk of Injury!

Use only locking hooks to safely lift the unit. Failure to use locking hooks could result in severe damage to the equipment, void the warranty, or cause personal injury or death.

Note: *A lifting bar can be made from the drawings shown ("Lifting Bar Dimensions," p. 23) using ASTM A514 Grade B Steel Plate (UNS K11630).*

Units are shipped attached to disposable wooden pallet and wrapped with protective cardboard and plastic stretch wrap.

Note: *To avoid unnecessary damage to your unit, place the crated unit near the trailer prior to its removal. Refer to the illustration provided.*

Important: *DO NOT use a sharp knife to remove the stretch wrap or cardboard wrap as damage to the exterior of the unit will result.*

1. Carefully remove plastic stretch wrap from unit.
2. Carefully remove the top cardboard cover.
3. Carefully remove the outer cardboard wrap.
4. Remove installation kit boxes, bottom panel, and any other loose components from rear of unit.
5. Install two forged eyebolts into the top corners of the unit and attach the 2 point lifting bar with locking hooks to the eyebolts. Raise unit only enough to remove slack from lifting bar chains.
6. Remove hardware holding unit to wooden pallet.
7. Unit is now ready for installation.

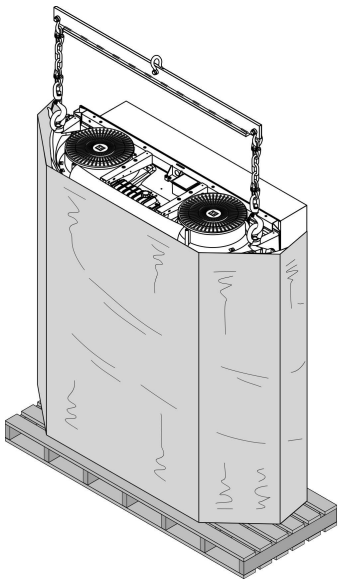

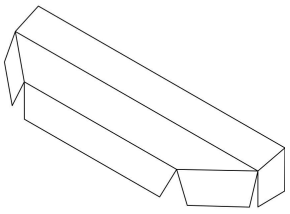

Installing the Heat Shield

Installation Procedures

Note: *Heat shield and screws can be found loosely attached to the rear of the unit with band wraps.*

The supplied heat shield must be installed onto the front outside wall of the trailer prior to unit installation. The shield should be positioned approximately 76.2 mm (3.00 in.) down from the cutout and centered horizontally as shown.

1. Thoroughly clean the area shown with isopropyl alcohol to remove dirt, grease, wax, etc.
2. Starting at the top of the shield, peel approximately 25.4 mm (1.00 in.) of the backing liner from the shield, place shield onto trailer wall and progressively remove liner downward while applying pressure to the foil.
3. Once shield is installed, apply pressure to the remove wrinkles.

   Note: *Any remaining wrinkles have no effect on performance.*
4. Install provided sealing screws at each corner and top and bottom center of the shield.
5. The unit is now ready to be installed.

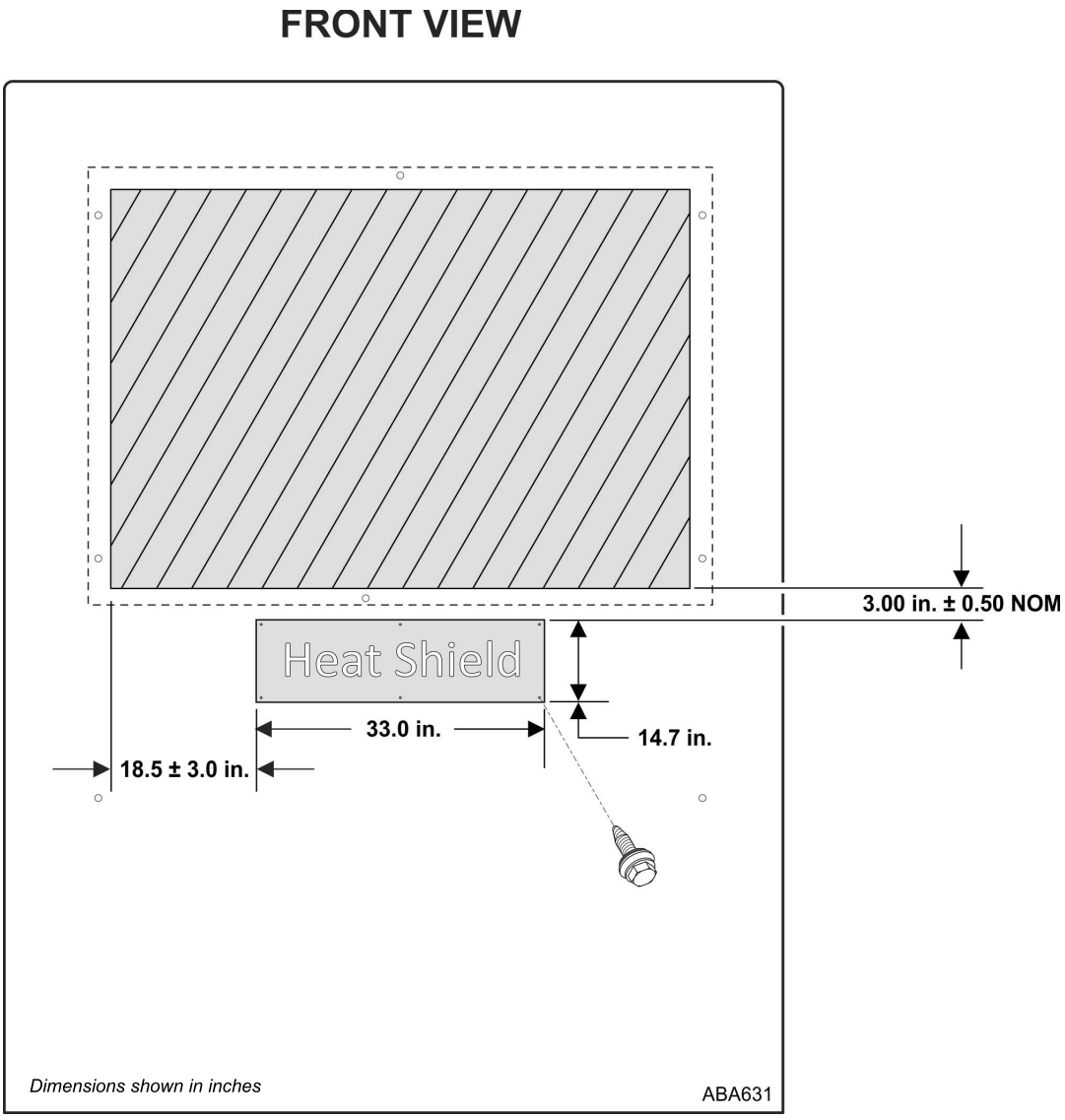

Installing the Unit

⚠ Warning

Equipment Damage and Risk of Injury!

Do not use a forklift to install the unit. This could result in severe damage to equipment, void the warranty, or cause personal injury or death.

⚠ Warning

Risk of Injury!

Thermo King requires a 2 point lifting bar to safely lift and install units. A lifting bar can be made from the drawings provided using ASTM A514 Grade B Steel Plate (UNS K11630).

⚠ Warning

Risk of Injury!

Use only locking hooks to safely lift the unit. Failure to use locking hooks could result in severe damage to the equipment, void the warranty, or cause personal injury or death.

Note: *A lifting bar can be made from the drawings shown ("Lifting Bar Dimensions," p. 23) using ASTM A514 Grade B Steel Plate (UNS K11630).*

Unit Installation

Note: *Refer to the illustration (Detail I) on the following page.*

1. Raise unit up to the trailer opening and position onto the unit mounting bolts.
2. Attach thick washer, standard washer, and elastic stop nuts provided in the installation kit. Torque to 82 N•m (60 ft. lbs.).

Access to Mounting Bolts

Note: *Refer to the illustration (Detail II) on the following page.*

a. Top side mounting hole through the hinged roadside grille.

b. Center side mounting hole through hinged roadside grille.

c. Lower side mounting hole through hinged roadside panel, behind hinged control box.

d. Center side mounting hole through hinged lower curbside door.

e. Lower side mounting hole through hinged curbside panel.

f. Center side mounting hole through hinged curbside grille.

g. Top side mounting hole through hinged curbside grille.

h. Top center mounting hole from top of the unit.

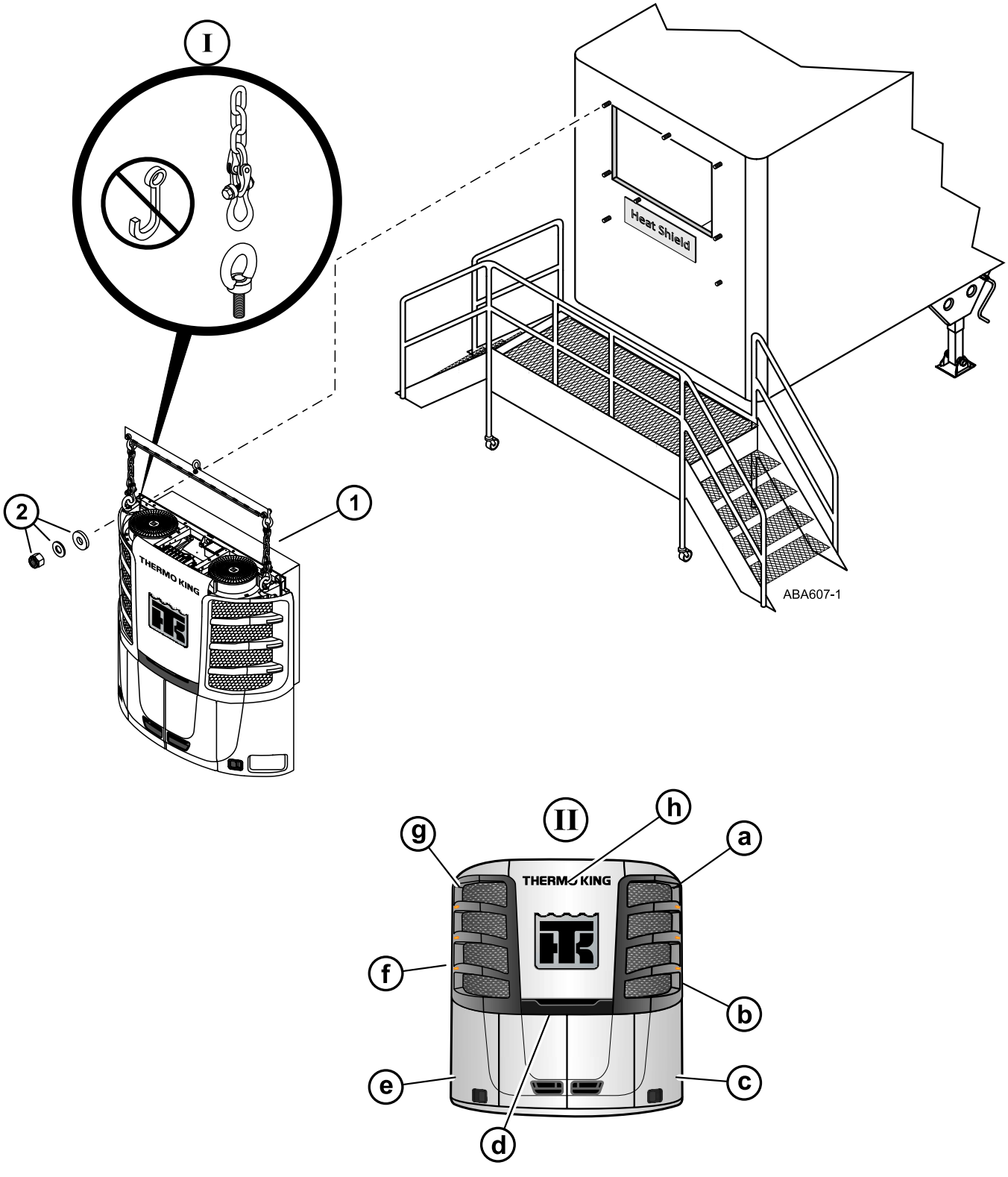
I
Heat Shield
ABA607-1
1
2
THERMO KING
II
a
b
c
d
e
f
g
h
THERMO KING

Installing Drain Hoses and Coolant Overflow Hose – Trailer Applications

Note: *Refer to the illustration provided.*

1. Evaporator drain hoses should run straight down the trailer wall from each side of the unit with no kinks or bends.
2. Cut off excess hose and attach check valves with supplied band wraps.
3. Secure each hose to trailer wall with two clamps and screws as shown.

   Important: *Upper clamp location varies by individual application while lower clamps should be installed 127 mm (5.00 in.) up from the bottom of the drain valves and not be so tight as to restrict water drainage.*
4. Coolant overflow hose should run straight down the wall with no kinks or bends.
5. Secure the overflow hose to the evaporator drain hose with supplied bandwraps as shown

   Important: *The band wraps must not be so tight as to restrict water drainage.*

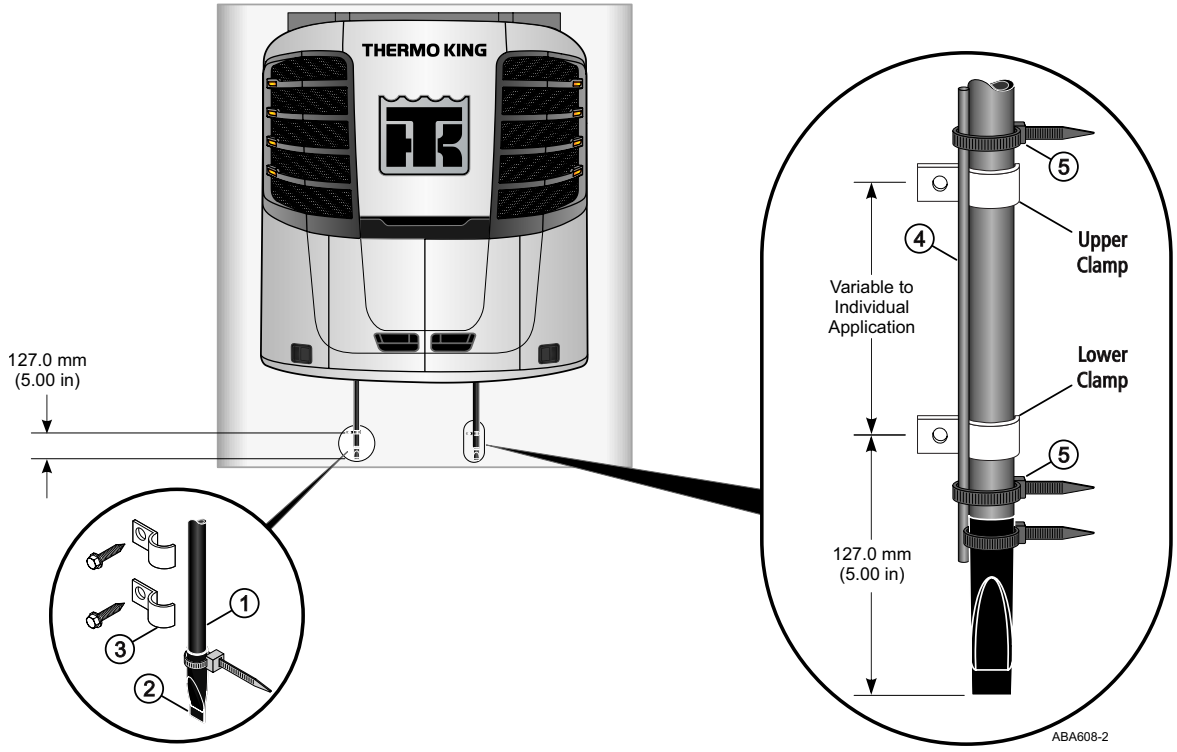

Installing Fuel Lines

C-Series Units Only

See "Safety Precautions," p. 5

Without Optional Fuel Heater

Important: *Using the wrong fuel system fittings may void your engine warranty! All Thermo King supplied fuel line fittings (except fuel line connector) are nickel plated brass for Precedent units.*

- **DO NOT** use fuel fittings (main body) made of brass, copper, zinc, zinc plated or galvanized steel where it would make direct contact with flowing diesel fuel. Diesel fuel flowing through these types of fittings allows those metals to leach into the fuel forming deposits on the injector tips which fouls them prematurely. Fuel fitting nuts, compression sleeves, and fuel line connectors made of brass are acceptable because diesel fuel does not flow across their surfaces
- **DO NOT** use PTFE (Polytetrafluoroethylene) thread sealing tape on fuel fittings in a Precedent unit. PTFE tape may allow strands into the fuel system that could plug the tight clearance fuel injectors causing failures.

Note: *Refer to the illustration provided.*

DETAIL I - Fuel lines should be routed in a protective housing with no kinks or sharp bends. Rubber grommets must be used when routing fuel lines through holes in metal.

DETAIL II - Secure all fuel lines with provided clamps.

DETAIL III - Both the fuel supply and the fuel return lines must be 25.4 (1.00 in.) from bottom of tank and the ends cut at 45 degree angle.

Important: *The band wrap, anchor tie and conduit provided in the installation kit are to be used to secure the fuel lines to the rear of the frame. The fuel lines must also be secured to the frame and the fuel pump bracket with the supplied clamps as shown.*

1. Install and route 3/8" fuel supply line from the fuel pump **INLET** fitting down to the fuel tank.
   a. Install 3/8" pass through fitting onto the fuel tank **SUPPLY** tube fitting.
   b. Cut end of 3/8" fuel line at 45 degrees and install sleeve and nut.
   c. Insert fuel line into fuel tank **SUPPLY** tube until it bottoms out, then pull line up 25.4 mm (1.00 in.) and tighten nut securely.
2. Install and route 3/8" fuel return line from fuel filter down to the fuel tank **RETURN** tube fitting.
   a. Install 3/8" pass through fitting onto the fuel tank **RETURN** tube fitting.
   b. Cut end of fuel line at 45 degrees and install sleeve and nut.
   c. Insert fuel line into fuel tank **RETURN** tube until it bottoms out, then pull line up 25.4 mm (1.00 in.) and tighten nut securely.
3. Remove plastic cap from the fuel tank air vent and point the outlet to the rear of the trailer.

Note: *Do not allow the unit to run out of fuel during the engine break-in period. Add a sufficient amount of fuel (approximately 20 gallons) to allow the unit to run for 8 to 12 hours during engine break-in and pre-delivery procedures.*

Figure 1. Without Optional Fuel Heater

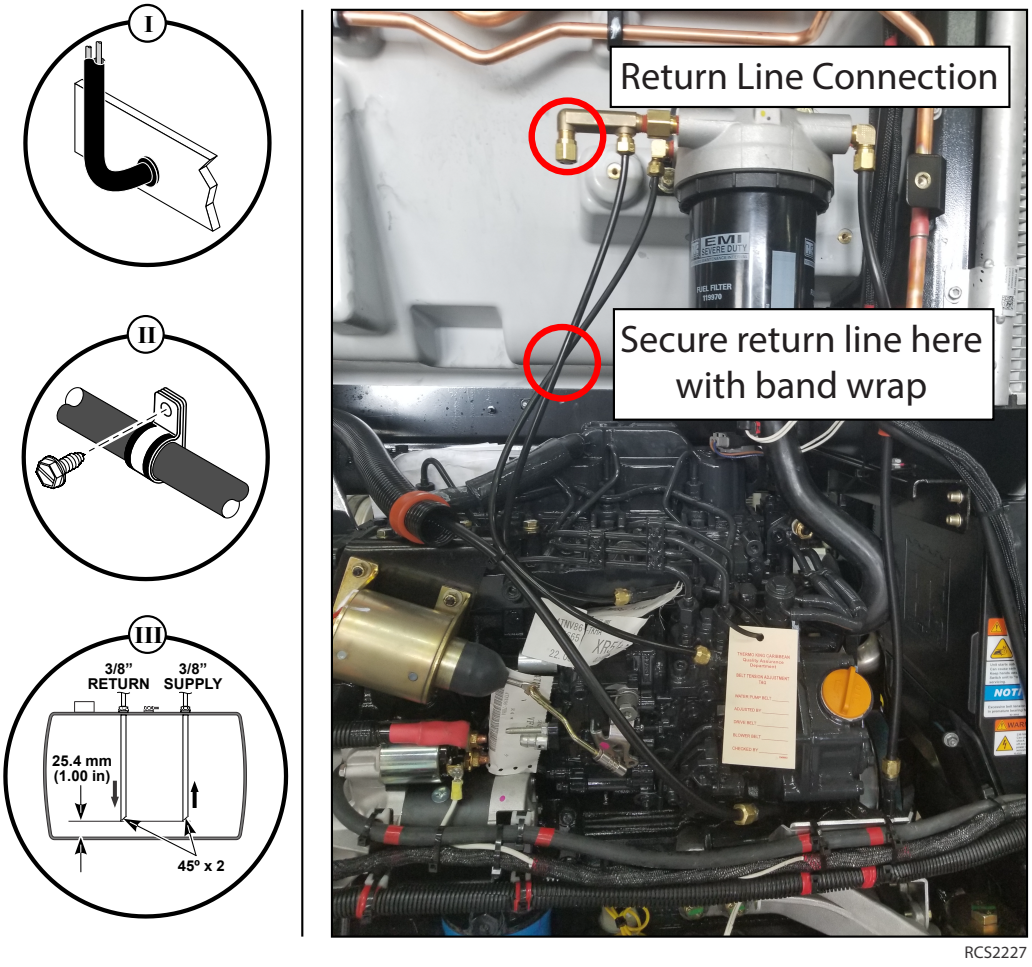

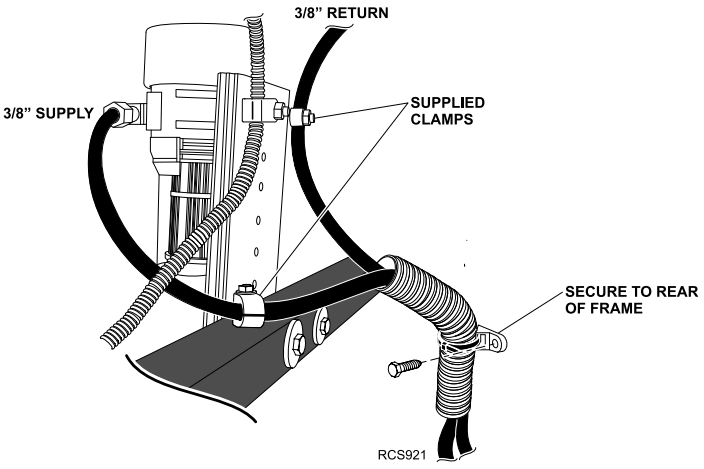

S-Series Units Only

Without Optional Fuel Heater

See "Safety Precautions," p. 5

Important: *Using the wrong fuel system fittings may void your engine warranty! All Thermo King supplied fuel line fittings (except fuel line connector) are nickel plated brass for Precedent units.*

- **DO NOT** use fuel fittings (main body) made of brass, copper, zinc, zinc plated or galvanized steel where it would make direct contact with flowing diesel fuel. Diesel fuel flowing through these types of fittings allows those metals to leach into the fuel forming deposits on the injector tips which fouls them prematurely. Fuel fitting nuts, compression sleeves, and fuel line connectors made of brass are acceptable because diesel fuel does not flow across their surfaces
- **DO NOT** use PTFE (Polytetrafluoroethylene) thread sealing tape on fuel fittings in a Precedent unit. PTFE tape may allow strands into the fuel system that could plug the tight clearance fuel injectors causing failures.

Note: *Refer to the illustration provided.*

DETAIL I - Fuel lines should be routed in a protective housing with no kinks or sharp bends. Rubber grommets must be used when routing fuel lines through holes in metal.

DETAIL II - Secure all fuel lines with provided clamps.

DETAIL III - Both the fuel supply and the fuel return lines must be 25.4 (1.00 in.) from bottom of tank and the ends cut at 45 degree angle.

Important: *The anchor tie and conduit provided in the installation kit are to be used to secure the fuel lines to the rear of the frame. The fuel lines must also be secured to the front of the frame with the supplied clamp as shown.*

1. Install and route 3/8" fuel line from **regulator / strainer SUPPLY** fitting down to the fuel tank.
   a. Install 3/8" pass through fitting onto the fuel tank **SUPPLY** tube fitting.
   b. Cut end of 3/8" fuel line at 45 degrees and install sleeve and nut.
   c. Insert fuel line into fuel tank **SUPPLY** tube until it bottoms out, then pull line up 25.4 mm (1.00 in.) and tighten nut securely.
2. Install and route 3/8" fuel line from **regulator / strainer RETURN** fitting down to the fuel tank.
   a. Install 3/8" pass through fitting onto the fuel tank **RETURN** tube fitting.
   b. Cut end of fuel line at 45 degrees and install sleeve and nut.
   c. Insert fuel line into fuel tank **RETURN** tube until it bottoms out, then pull line up 25.4 mm (1.00 in.) and tighten nut securely.
3. Remove plastic cap from the fuel tank air vent and point the outlet to the rear of the trailer.

Note: *It is important not to allow the unit to run out of fuel during the engine break-in period. Add a sufficient amount of fuel (approximately 20 gallons) to allow the unit to run for 8 to 12 hours during engine break-in and pre-delivery procedures.*

Figure 2. S-Series Without Optional Fuel Heater Shown

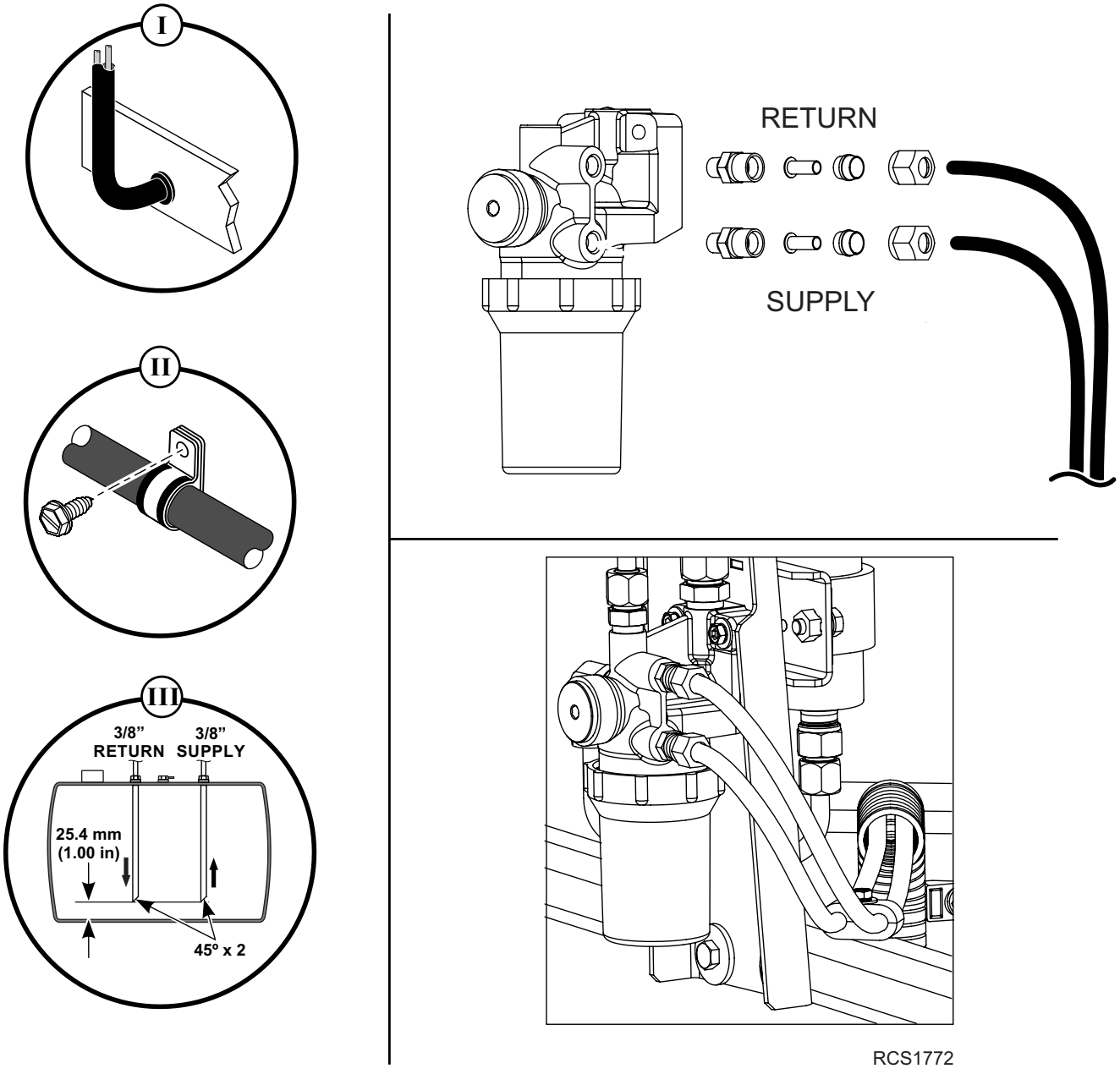

With Optional Fuel Heater

See "Safety Precautions," p. 5

Important: *Using the wrong fuel system fittings may void your engine warranty! All Thermo King supplied fuel line fittings (except fuel line connector) are nickel plated brass for Precedent units.*

- **DO NOT** use fuel fittings (main body) made of brass, copper, zinc, zinc plated or galvanized steel where it would make direct contact with flowing diesel fuel. Diesel fuel flowing through these types of fittings allows those metals to leach into the fuel forming deposits on the injector tips which fouls them prematurely. Fuel fitting nuts, compression sleeves, and fuel line connectors made of brass are acceptable because diesel fuel does not flow across their surfaces
- **DO NOT** use PTFE (Polytetrafluoroethylene) thread sealing tape on fuel fittings in a Precedent unit. PTFE tape may allow strands into the fuel system that could plug the tight clearance fuel injectors causing failures.

Note: *Refer to the illustration provided.*

DETAIL I - Fuel lines should be routed in a protective housing with no kinks or sharp bends. Rubber grommets must be used when routing fuel lines through holes in metal.

DETAIL II - Secure all fuel lines with provided clamps.

DETAIL III - Both the fuel supply and the fuel return lines must be 25.4 (1.00 in.) from bottom of tank and the ends cut at 45 degree angle.

Important: *The anchor tie and conduit provided in the installation kit are to be used to secure the fuel lines to the rear of the frame. The fuel lines must also be secured to the front of the frame with the supplied clamp as shown.*

1. Install and route 3/8" fuel supply line from **fuel heater INLET** fitting down to the fuel tank.
   a. Install 3/8" pass through fitting onto the fuel tank **SUPPLY** tube fitting.
   b. Cut end of 3/8" fuel line at 45 degrees and install sleeve and nut.
   c. Insert fuel line into fuel tank **SUPPLY** tube until it bottoms out, then pull line up 25.4 mm (1.00 in.) and tighten nut securely.
2. Install and route 3/8" fuel line from **regulator / strainer RETURN** fitting down to the fuel tank.
   a. Install 3/8" pass through fitting onto the fuel tank **RETURN** tube fitting.
   b. Cut end of fuel line at 45 degrees and install sleeve and nut.
   c. Insert fuel line into fuel tank **RETURN** tube until it bottoms out, then pull line up 25.4 mm (1.00 in.) and tighten nut securely.
3. Remove plastic cap from the fuel tank air vent and point the outlet to the rear of the trailer.

Note: *It is important not to allow the unit to run out of fuel during the engine break-in period. Add a sufficient amount of fuel (approximately 20 gallons) to allow the unit to run for 8 to 12 hours during engine break-in and pre-delivery procedures.*

Figure 3. S-Series With Optional Fuel Heater Shown

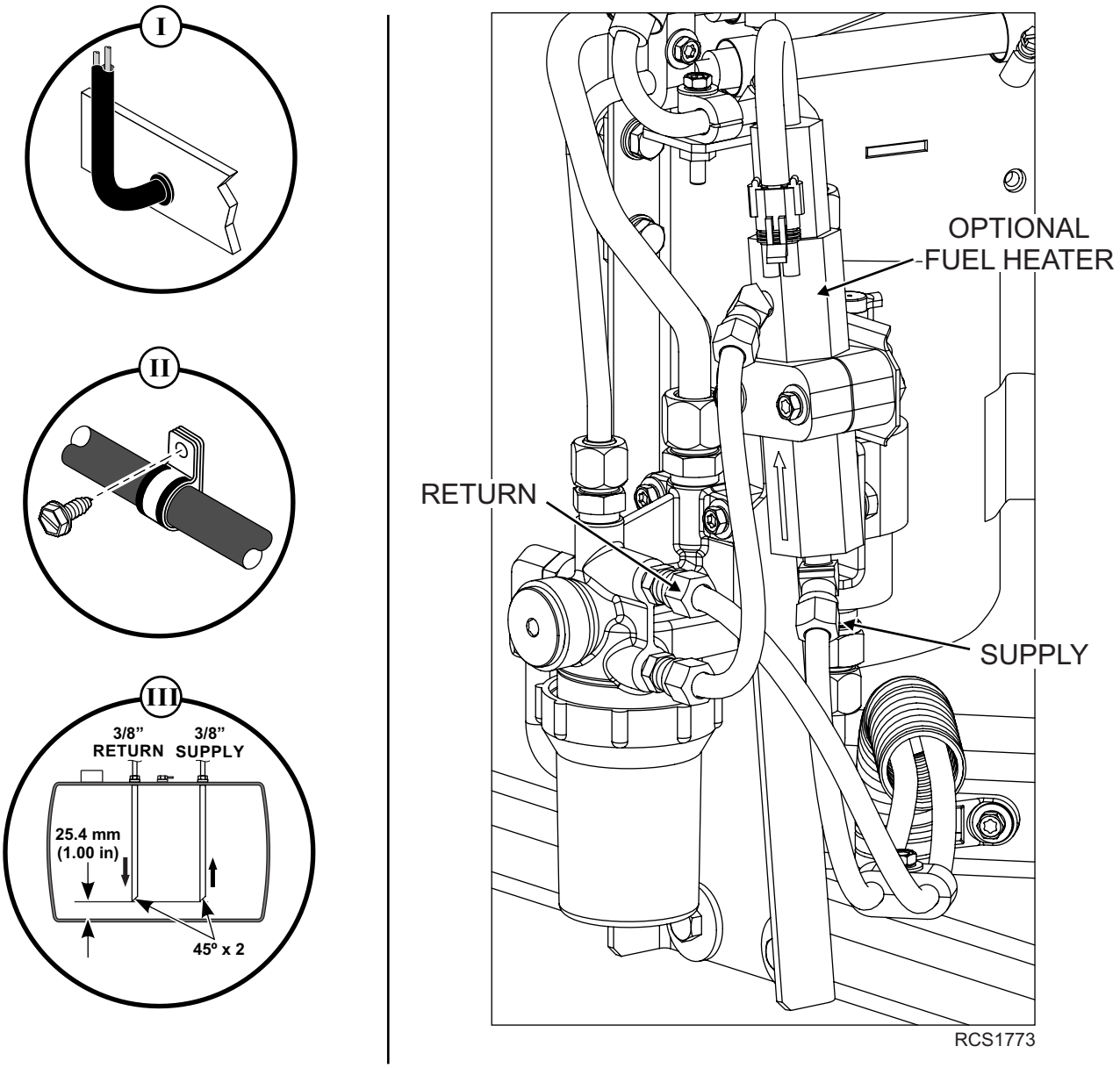

Installing UFLS Harness – Trailer Applications

⚠ Danger

Fire Hazard!

Do not route electrical harness together with fuel lines as this could cause a fire resulting in death or serious injury.

Important: *All electrical connections from UFLS harness to UFLS must be made with supplied crimp and solder style connectors with separate heat shrink tubing. DO NOT burn heat shrink. If heat shrink is burnt, charred, or has bubbles from overheating, the wire connections must be removed and redone correctly.*

Important: *This is a "Solid State" fuel level sensor and the SR-4 Controller must be programmed accordingly to enable the fuel level feature.*

Units Built Before December 16, 2024

Note: *Refer to illustration on the next pages.*

1. Attach the three interconnect harness wires to the three fuel sensor wires located inside control box by following steps a-d below.

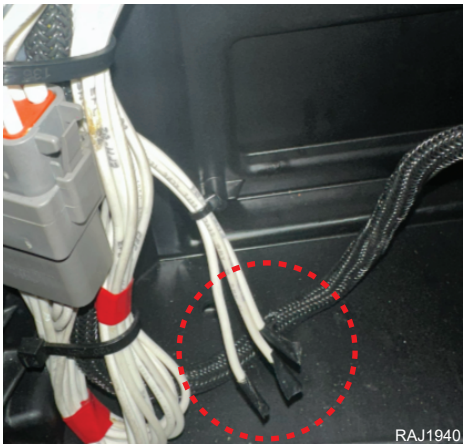

2. Route interconnect harness to fuel tank using trailer's harness conduit or chase to avoid interference with fifth wheel plate area.
3. Splice interconnect harness wires to the UFLS wires by following steps a-d below.
   a. Slide supplied heat shrink tubing onto each wire and position them away from joint.
   b. Connect each wire with wire connector and crimp securely.
   c. Solder wires to wire connectors with a soldering gun.
   d. Slide heat shrink tubing over each wire connector and applying heat with a heat gun.
4. Secure harness with clamps as needed.

Units Built Before December 16, 2024

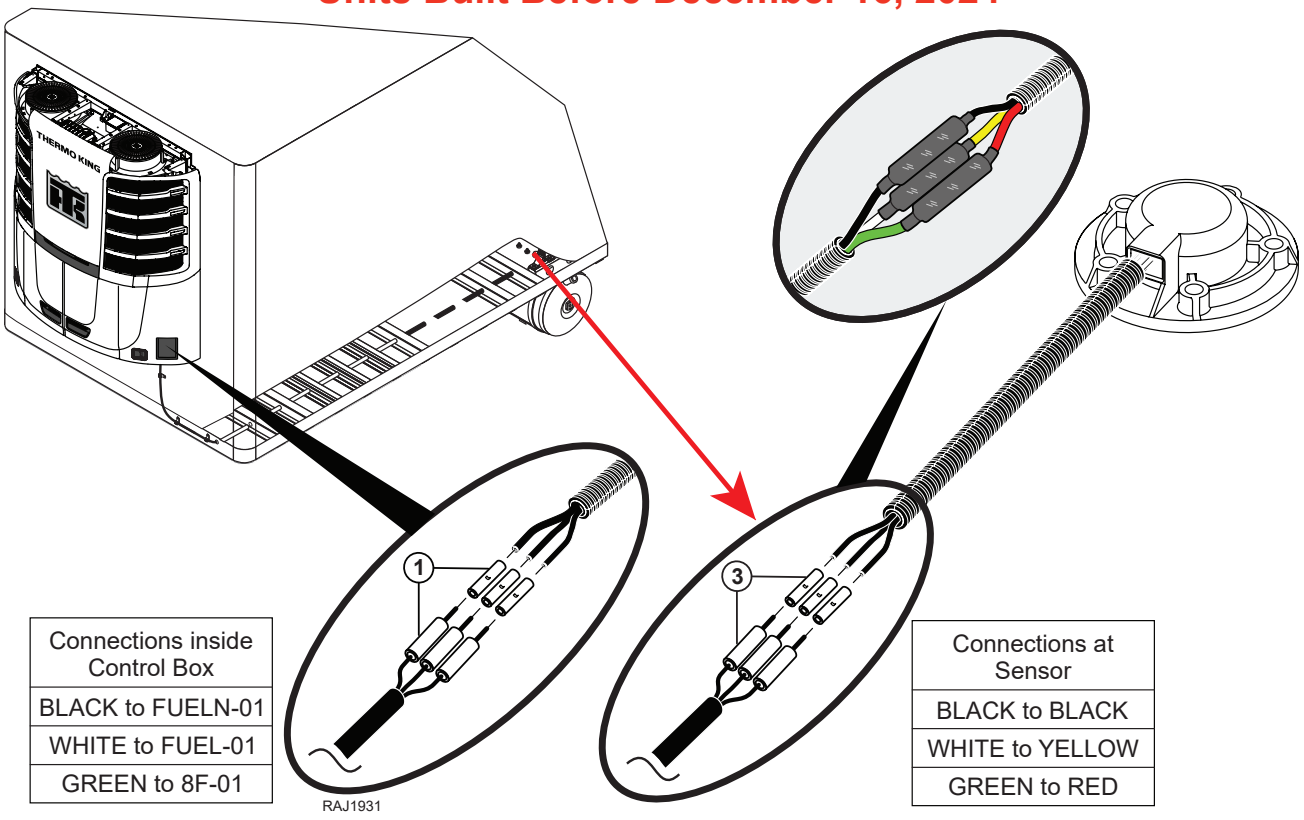

Connections inside Control Box
BLACK to FUELN-01
WHITE to FUEL-01
GREEN to 8F-01

Connections at Sensor
BLACK to BLACK
WHITE to YELLOW
GREEN to RED

Units Built After December 16, 2024

Note: *Refer to illustration on the next page.*

1. Attach the three interconnect harness wires to the three fuel sensor wires located inside control box by following steps a-d below.

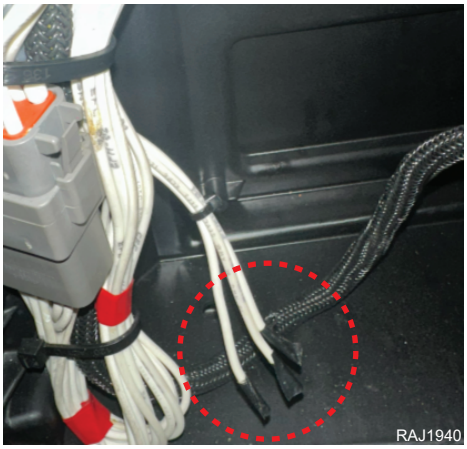

   a. Slide supplied heat shrink tubing onto each wire and position them away from joint.
   b. Connect each wire with wire connector and crimp securely.
   c. Solder wires to wire connectors with a soldering gun.
   d. Slide heat shrink tubing over each wire connector and applying heat with a heat gun.

2. Route interconnect harness to fuel tank using trailer's harness conduit or chase to avoid interference with fifth wheel plate area.
3. Connect the interconnect harness 3–wire connector to the UFLS 3–wire connector near the fuel tank.
   - Attach the edge clip part number **513995** to the fuel tank mounting bracket as shown below.
   - Secure the UFLS connection to the edge clip with a tie strap as shown below.

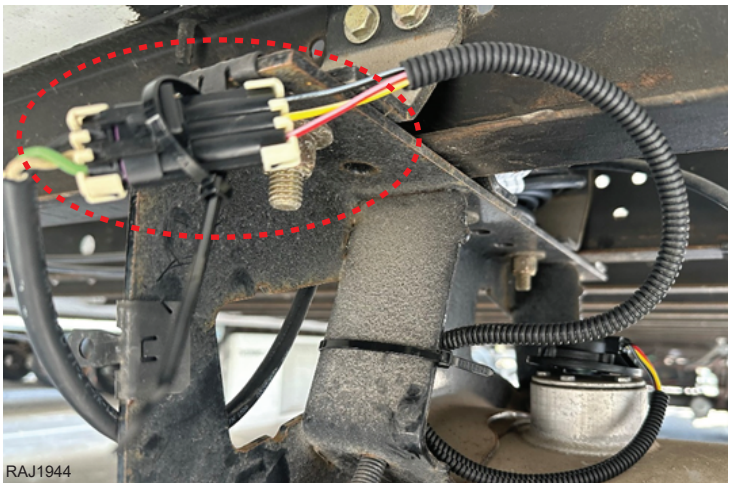

4. Secure the UFLS harness with clamps and cable ties as needed along the entire path of the harness.

Units Built After December 16, 2024

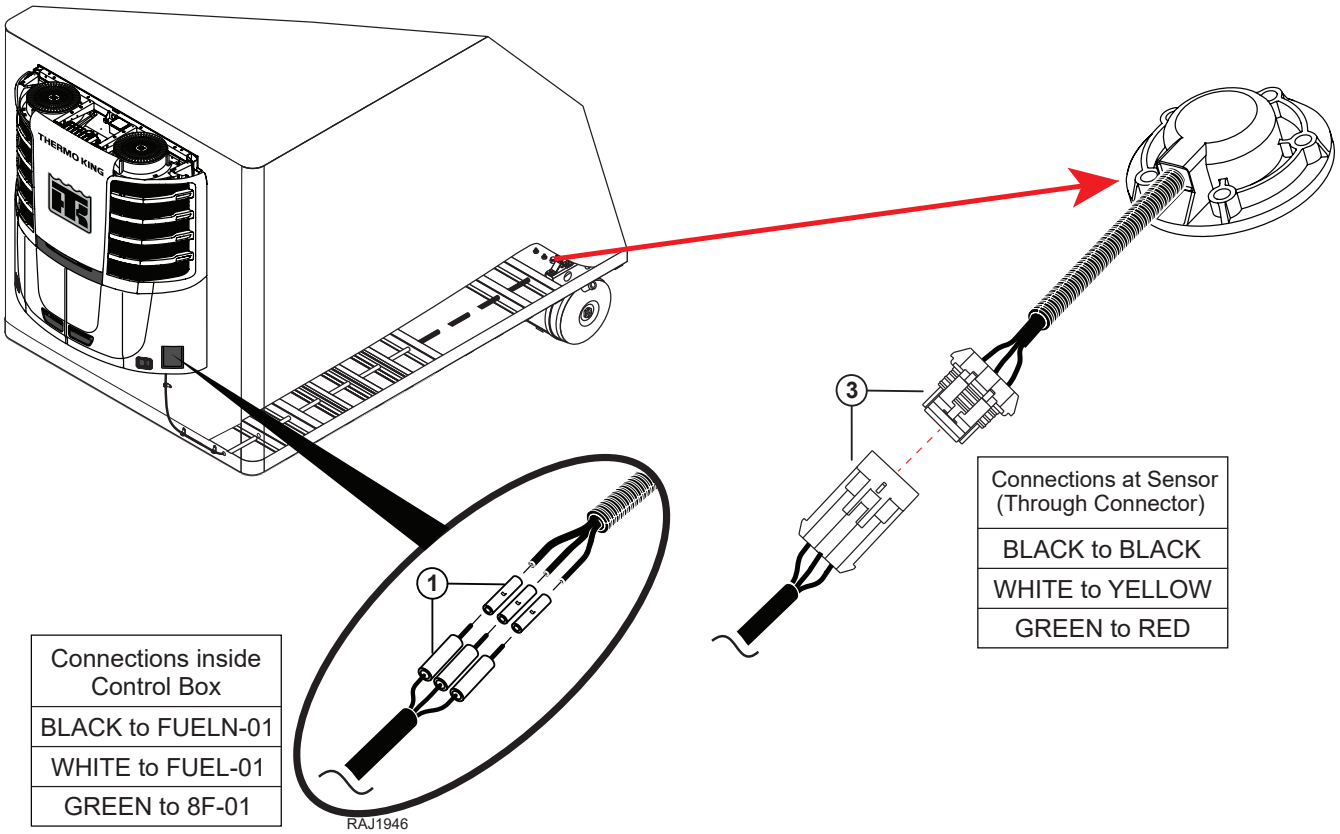

Connections inside Control Box
BLACK to FUELN-01
WHITE to FUEL-01
GREEN to 8F-01

Connections at Sensor (Through Connector)
BLACK to BLACK
WHITE to YELLOW
GREEN to RED

Installing SmartPower Receptacle — Trailer Applications

Power Receptacle Installation

⚠ Danger

Hazardous Voltage!

Risk of fatal injury from electric shocks! Precedent SmartPower units with the remote power receptacle option require the electrical wiring (installer supplied) to be correctly sized and properly installed to prevent serious injury or death! The unit ground wire (supplied) must also be properly attached to the trailer chassis. Refer to TK 55597 for installation guidelines. These guidelines must be followed.

Note: *SmartPower receptacle is factory wired and secured inside the unit with tie bands for shipment. Install receptacle as follows:*

1. Remove tie bands securing receptacle to unit.
   a. Attach receptacle bracket under roadside of unit with two supplied screws.
   b. Securely tighten hardware.
2. Secure cable to trailer wall with supplied cable clamps and screws.

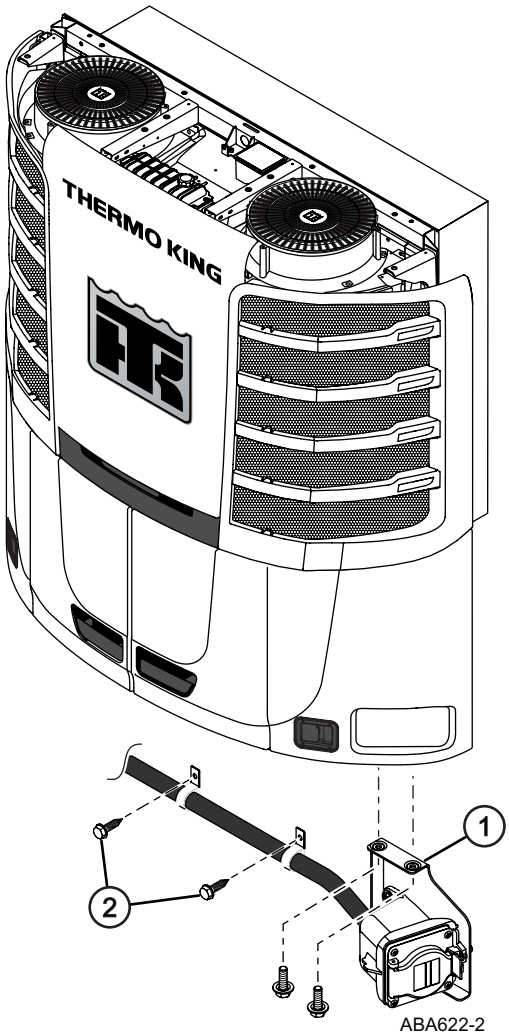

ABA622-2

Installing LED Clearance Lighting (Option) – Trailer Applications

Installation

Note: *Refer to the illustration provided.*

1. Locate the following:
   - LED extension harness bundled and secured under the unit.
   - Fuse holder and butt splice connector shipped with the unit.
2. Route the LED extension harness to the trailer's OEM lighting connector.
3. Allow enough wire to provide a drip loop and cut LED extension harness to proper length.
4. **POWER WIRE** - Install the fuse holder to the power wire **(LEDP-07)** with the butt splice connector.
   - Connect the power wire with the fuse holder to the **BROWN** wire on the trailer's OEM lighting connector.
5. **GROUND WIRE** - Connect the ground wire **(LEDN-07)** to the **WHITE** wire on the trailer's OEM lighting connector.
6. Provide a drip loop and secure wires with a clamp.

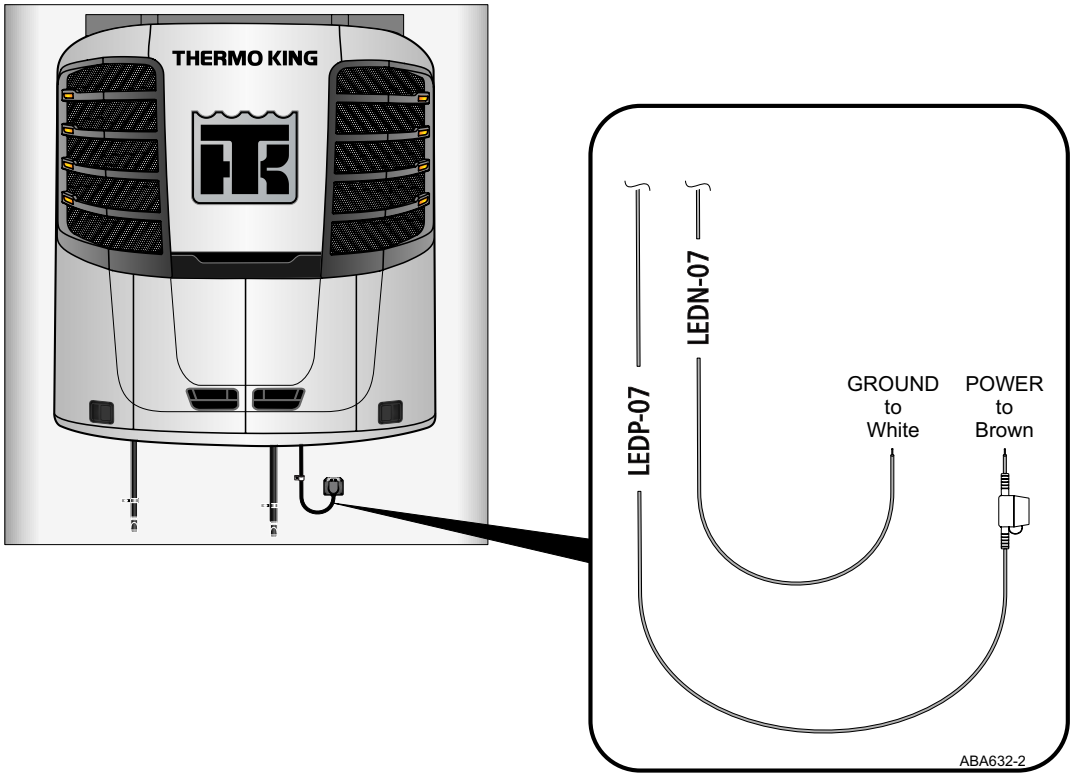

Installing Battery

Important Battery Information

Important: *See "Battery Installation and Cable Routing" ("Safety Precautions," p. 5) for additional information.*

⚠ Warning

Hazard of Explosion!

An improperly installed battery could result in a fire, explosion, or injury. A Thermo King approved battery must be installed and properly secured to the battery tray.

⚠ Warning

Hazard of Explosion!

Improperly installed battery cables could result in a fire, explosion, or injury. Battery cables must be installed, routed, and secured properly to prevent them from rubbing, chaffing, or making contact with hot, sharp, or rotating components.

Note: *Thermo King units are designed for one 12 volt, group 31 battery. The battery must be suitable for deep cycling, heavy duty, and rated with a minimum of 95 amp/hr.*

Battery Installation

Important: *Care should be taken to prevent direct metal contact to the battery's positive post when installing the battery.*

Note: *Refer to the illustration provided.*

1. Open the roadside panel to access the control box.
   a. Loosen the two bolts securing the control box in place.
   b. Swing the control box away to gain access to the battery tray area.
2. Open the roadside door.
   a. Pull the hinge pins and remove the door assembly from unit.
3. Locate the lower bracket directly in front of the battery tray.
   a. Remove the two bolts and bracket from the frame.
4. Install the battery into the plastic liner.
5. Attach the **positive (+)** battery cable on the positive battery post and securely tighten.
6. Install the battery hold down rods and bracket.
   a. Tighten the two battery hold down rods to 2.25 N•m (20 in -lbs.). **DO NOT over tighten as this may crack or distort the battery**.
7. Attach the **negative (-)** battery cable on the negative battery post and securely tighten.
8. Reinstall the bracket removed in Step 3 and securely tighten hardware.
9. Swing the control box assembly back into place and securely tighten the two screws.
10. Reinstall the roadside door back onto the hinges and securely close.

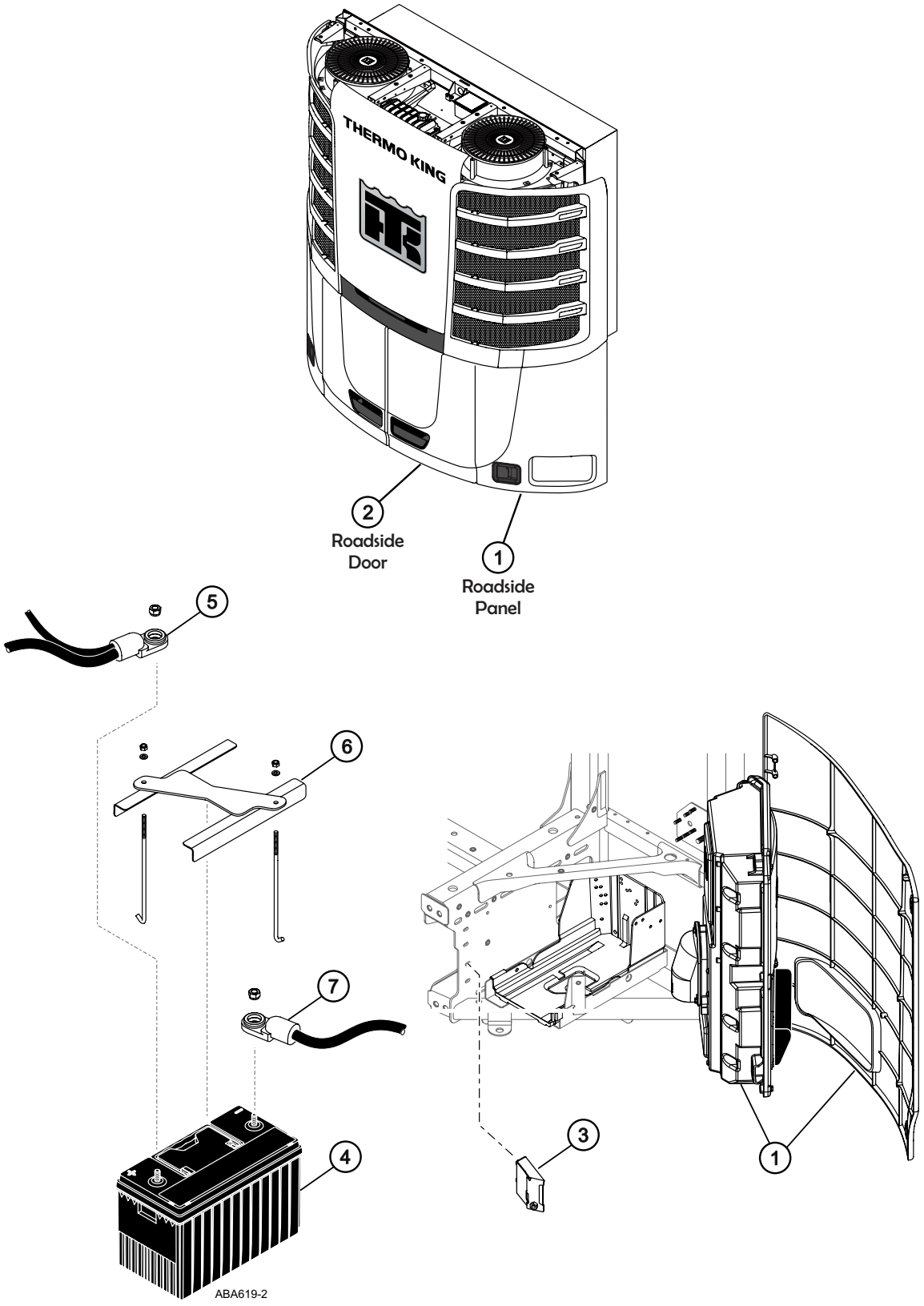
THERMO KING
2
Roadside
Door
1
Roadside
Panel
5
6
7
4
3
1
ABA619-2

Installing Top Covers and Bottom Pan – Trailer Applications

Important Fairing Information

Note: *The top fairing increase the height of the unit by approximately 76 mm (3.00 in.). Tractor trailer height restrictions differ from state to state. The total height of the unit installed onto your particular trailer should not exceed these height restrictions. Remove the top fairing if it causes the unit to exceed these height restrictions.*

Top Covers

Important: *Top covers must be positioned between condenser fan grille and fairing as shown in Detail A. Refer to the illustration provided.*

1. Open the top door along with the curbside and roadside grilles.
2. Remove the two M6 screws that secure the fairing to each condenser fan grille as shown in Detail A.
3. Place top covers onto unit.
   a. Lift fairing up just enough so the top cover mounting holes are positioned under the fairing mounting tab,
   b. Loosely reinstall the M6 screws back down through fairing, top cover and into condenser fan grille.
   c. Install remaining M6 scews supplied in kit to secure top covers to threaded inserts on frame.
   d. Use a T-30 Torx drive and tighten screws to 69 kg-cm (60 –in.lbs).

Bottom Pan

4. Open the roadside and curbside panels and doors.
5. Install five (5) nut clips onto frame: three (3) in frame mounting tabs, and one (1) in the end of the frame channels as shown in Detail B.
   a. Position bottom pan under unit, align the five (5) mounting holes with the frame mounting tabs with nut clips and loosely install the M6 screws and washers.
   b. Loosely install one (1) M6 screw and washer through the front center pan lip and into the front frame tab insert.
   c. Loosely install the remaining eight (8) M6 screws and washers.
   d. Use a T-30 Torx drive and tighten screws to 69 kg-cm, (60 in-lbs).
6. Close and secure all doors, panels and grilles.

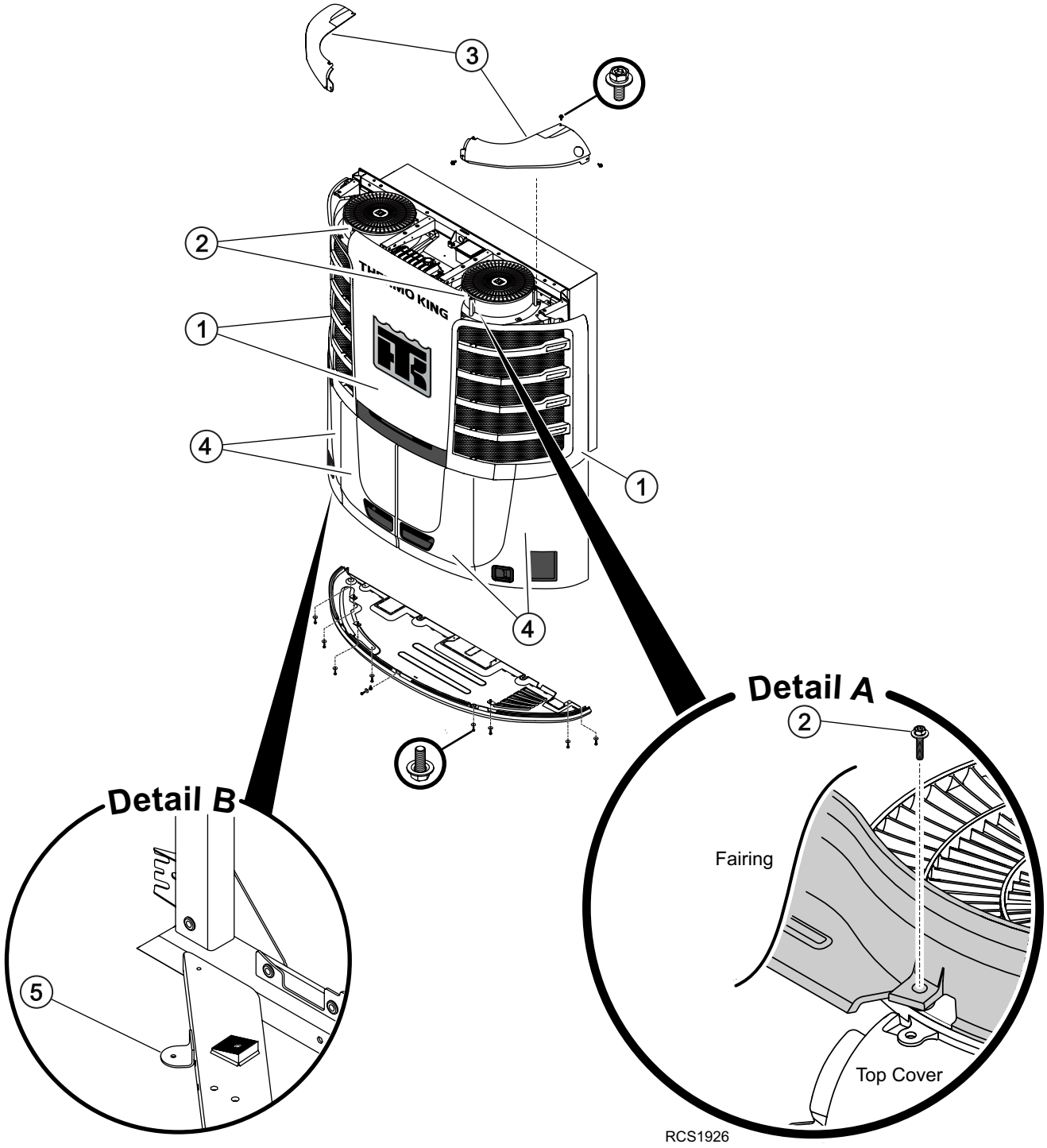
3
2
1
4
1
4
Detail A
2
Fairing
Top Cover
Detail B
5
RCS1926

Important Information – Completing The Installation

C-600M , S-610M and S-610DE (3 Zone) Units

Notice

Equipment Damage!

Severe compressor damage will result from operating the Precedent Multi-Temperature host unit before completing the entire installation which includes: installing all components, releasing/recovering holding charges, connecting the refrigeration lines, leak testing, evacuation, clean-up, and charging the system with the proper amount and type of refrigerant. Refer to the S-2 and S-3 Remote Evaporator Systems Installation Manual (TK 55774) to complete the installation.

S-610DE (2 Zone) Units

To complete the installation, refer to the S-2 and S-3 Remote Evaporator Systems Installation Manual (TK 55774) for information regarding installing the Center Wall Divider, Unit Run-In and Checkout Procedures.

Notes

Thermo King – by Trane Technologies (NYSE: TT), a global climate innovator – is a worldwide leader in sustainable transport temperature control solutions. Thermo King has been providing transport temperature control solutions for a variety of applications, including trailers, truck bodies, buses, air, shipboard containers and railway cars since 1938. For more information, visit www.thermoking.com or www.tranetechnologies.com.

Thermo King has a policy of continuous product and product data improvements and reserves the right to change design and specifications without notice. We are committed to using environmentally conscious print practices.

TK 55745-2-IM-EN 12 Dec 2024
Supersedes (New)

©2015 Trane Technologies